NOTICE OF INCORPORATION

United States Legal Document

☞ All citizens and residents are hereby advised that this is a legally binding document duly incorporated by reference and that failure to comply with such requirements as hereby detailed within may subject you to criminal or civil penalties under the law. Ignorance of the law shall not excuse noncompliance and it is the responsibility of the citizens to inform themselves as to the laws that are enacted in the United States of America and in the states and cities contained therein. ☜

* *
*

ASME A17.3, Safety Code for Existing Elevators and Escalators (Includes Requirements for Electric and Hydraulic Elevators and Escalators), 2008 Edition, as required by States and Municipalities, including Idaho in the Safety Rules for Elevators, Escalators, and Moving Walks, IDAPA 07.04.02.004.c.

ASME A17.3-2008
(Revision of ASME A17.3-2005)

Safety Code for Existing Elevators and Escalators

Includes Requirements for Electric and Hydraulic Elevators and Escalators

AN AMERICAN NATIONAL STANDARD



The American Society of Mechanical Engineers

ASME
SETTING THE STANDARD

Copyright © 2009 by the American Society of Mechanical Engineers.
No reproduction may be made of this material without written consent of ASME.



ASME A17.3-2008
(Revision of ASME A17.3-2005)

Safety Code for Existing Elevators and Escalators

Includes Requirements for Electric and Hydraulic Elevators and Escalators

AN AMERICAN NATIONAL STANDARD

The American Society of Mechanical Engineers

ASME
SETTING THE STANDARD

Copyright © 2009 by the American Society of Mechanical Engineers.
No reproduction may be made of this material without written consent of ASME.

Date of Issuance: January 9, 2009

The next edition of this Code is scheduled for publication in 2011. There will be no addenda issued to this edition.

ASME issues written replies to inquiries concerning interpretations of technical aspects of this Code. The interpretations will be included with each edition. Interpretations are also published on the ASME Web site under the Committee Pages at http://cstools.asme.org as they are issued.

ASME is the registered trademark of The American Society of Mechanical Engineers.

This code was developed under procedures accredited as meeting the criteria for American National Standards. The Standards Committee that approved the code was balanced to assure that individuals from competent and concerned interests have had an opportunity to participate. The proposed code was made available for public review and comment that provides an opportunity for additional public input from industry, academia, regulatory agencies, and the public-at-large.

ASME does not "approve," "rate," or "endorse" any item, construction, proprietary device, or activity.

ASME does not take any position with respect to the validity of any patent rights asserted in connection with any items mentioned in this document, and does not undertake to insure anyone utilizing a standard against liability for infringement of any applicable letters patent, nor assume any such liability. Users of a code are expressly advised that determination of the validity of any such patent rights, and the risk of infringement of such rights, is entirely their own responsibility.

Participation by federal agency representative(s) or person(s) affiliated with industry is not to be interpreted as government or industry endorsement of this code.

ASME accepts responsibility for only those interpretations of this document issued in accordance with the established ASME procedures and policies, which precludes the issuance of interpretations by individuals.

No part of this document may be reproduced in any form,
in an electronic retrieval system or otherwise,
without the prior written permission of the publisher.

The American Society of Mechanical Engineers
Three Park Avenue, New York, NY 10016

Copyright © 2009 by
THE AMERICAN SOCIETY OF MECHANICAL ENGINEERS
All rights reserved
Printed in U.S.A.

Copyright © 2009 by the American Society of Mechanical Engineers.
No reproduction may be made of this material without written consent of ASME.

CONTENTS

Foreword vi
Committee Roster viii
Preface xii
Summary of Changes xv

Part I Introduction 1
1.1 Scope 1
1.2 Application of Code 1
1.3 Purpose and Exceptions 2
1.4 Definitions 2
1.5 Alterations, Maintenance, and Inspections and Tests 17
1.6 Reference Documents 17

Part II Hoistways and Related Construction for Electric Elevators 20
Scope 20
2.1 Hoistways 20
2.2 Machine Rooms and Machinery Spaces 21
2.3 Pits 22
2.4 Clearances and Runbys 22
2.5 Protection of Spaces Below Hoistways 22
2.6 Hoistway Entrances 23
2.7 Hoistway Door Locking Devices, Parking Devices, and Access 24
2.8 Power Operation of Doors and Gates 26

Part III Machinery and Equipment for Electric Elevators 28
Scope 28
3.1 Buffers and Bumpers 28
3.2 Counterweights 28
3.3 Car Frames and Platforms 28
3.4 Car Enclosures 29
3.5 Safeties 31
3.6 Speed Governors 32
3.7 Capacity and Loading 32
3.8 Driving Machines and Sheaves 34
3.9 Terminal Stopping Devices 35
3.10 Operating Devices and Control Equipment 35
3.11 Emergency Operation and Signaling Devices 37
3.12 Suspension Means and Their Connections 38

Part IV Hydraulic Elevators 40
Scope 40
4.1 Hoistway, Hoistway Enclosures, and Related Construction 40
4.2 Mechanical Equipment 40
4.3 Driving Machines 40
4.4 Valves, Supply Piping, and Fittings 40
4.5 Tanks 41
4.6 Terminal Stopping Devices 41
4.7 Operating Devices and Control Equipment 41
4.8 Additional Requirements for Counterweighted Hydraulic Elevators 42
4.9 Additional Requirements for Roped-Hydraulic Elevators 42

Copyright © 2009 by the American Society of Mechanical Engineers.
No reproduction may be made of this material without written consent of ASME.

Part V **Escalators** 44
Scope 44
5.1 Construction 44
5.2 Brakes 45
5.3 Operating and Safety Devices 45
5.4 Lighting of Escalators 46
5.5 Entrance and Egress Ends 46

Part VI **Dumbwaiters** 49
Scope 49
6.1 Hoistway, Hoistway Enclosures, and Related Construction 49
6.2 Machinery and Equipment for Hand and Electric Dumbwaiters 50
6.3 Machinery and Equipment for Hydraulic Dumbwaiters 52

Part VII **Hand Elevators** 54
Scope 54
7.1 Hoistway, Hoistway Enclosures, and Related Construction 54
7.2 Machinery and Equipment 55

Part VIII **Sidewalk Elevators** 57
Scope 57
8.1 Hoistway, Hoistway Enclosures, and Machine Rooms 57
8.2 Machinery and Equipment 57

Part IX **Moving Walks** 60
Scope 60
9.1 Protection of Floor Openings 60
9.2 Protection of Supports and Machine Spaces Against Fire 60
9.3 Construction Requirements 60
9.4 Entrance and Egress Ends 61
9.5 Driving Machine, Motor, and Brake 61
9.6 Operating and Safety Devices 61
9.7 Lighting and Access 62

Part X **Private Residence Elevators** 63
Scope 63
10.1 Hoistway, Hoistway Enclosures, and Related Construction 63
10.2 Cars 65
10.3 Counterweights 65
10.4 Safeties and Governors 66
10.5 Car and Counterweight Guide Rails and Fastenings 66
10.6 Car and Counterweight Buffers 66
10.7 Driving Machines, Sheaves, and Their Supports 66
10.8 Terminal Stopping Devices 68
10.9 Operating Devices and Control Equipment 68
10.10 Emergency Signal Devices 69
10.11 Limitation of Load, Speed, and Rise 69
10.12 Marking Plates 69
10.13 Suspension Means 69

Figures
3.7.1 Inside Net Platform Areas for Passenger Elevators 33
5.3.11 Caution Sign 47

Tables
1.6(a) Reference Documents 18
1.6(b) Procurement Information 19
3.7.1 Maximum Inside Net Platform Areas for the Various Rated Loads 33
3.12.3 Minimum Factors of Safety for Suspension Wire Ropes 39

Copyright © 2009 by the American Society of Mechanical Engineers.
No reproduction may be made of this material without written consent of ASME.

Nonmandatory Appendices

A	Distances Between Hoistway Doors and Car Doors or Gates	71
B	Types of Roped-Hydraulic Elevators	76
C	A17.1–1987, Rules 211.3–211.8	77
D	Rack and Pinion Machines (A17.1–1987, Rules 208.3–208.9d, and Rule 1200.4e)	80
Index		82

Copyright © 2009 by the American Society of Mechanical Engineers.
No reproduction may be made of this material without written consent of ASME.

(08)

FOREWORD

The American Society of Mechanical Engineers (ASME) has published since 1921 a safety code for elevators, escalators, and related equipment. The following is a brief history of how the various editions of this Code addressed the matter of retroactive requirements for existing installations.

The 1921 edition did not differentiate between new and existing installations.

The second edition (1925) and third edition (1931) contained the following statements in their Introductions:

> "New and Old Installations. After the date on which the Code becomes effective, all new construction and installations shall conform to its provisions. Equipment installed prior to that date need not, however, be modified to conform to its rules except where required by the key number opposite the rule. Reference figures attached to the various rules or paragraphs indicate when such rules or paragraphs become effective when applied to existing installations as follows:
> *Key to Index Figures*
> (0) To be applied immediately.
> (1) Not to be applied to existing installations.
> (2) To be applied to existing installations only to the extent ordered by the administrative authority.
> (3) To be applied to existing installations when next renewal of cables or other parts affected is made.
> (6) To be applied to existing installations six months after the adoption of this Code.
> (12) To be applied to existing installations 1 year (12 months) after the adoption of this Code.
> (24) To be applied to existing installations two years after the adoption of this Code."

This practice was discontinued with the fourth edition. Quoting from ASA A17.1–1937:

> "This Edition of the Code makes no reference to the application of the individual rules to Existing Installations, and the key numbers in the previous Edition have been omitted. This matter is left to the authorities drafting legal regulations, who are familiar with the local conditions. A too extensive retroactive application is not advisable in any case. The Code contains many rules intended to obviate minor hazards which can be easily eliminated in a new installation, but the change of an existing installation might involve a financial outlay entirely out of proportion to the benefits secured.
>
> "The Sectional Committee recommends that rules for hoistway-door interlocks, car-gate contacts, hoistway limit switches, and the entire Part VI (Inspection, Maintenance, and Operation) be made applicable to every installation already existing at the time of the adoption of the Code, and that provisions be made also to secure adequate under-car safeties for such installations."

This practice remained essentially unchanged through all later editions of the Code. Only the requirements for inspection, maintenance, alteration, repair, and replacement apply retroactively to existing installations. Quoting from the Preface of ANSI/ASME A17.1–1981:

> "Not all of the Rules of the Code apply to equipment installed prior to its adoption by jurisdictional authorities, but those which do apply to existing as well as to new installations are outlined under Scope in the Introduction.
>
> "The Code contains many Rules intended to obviate hazards which can be avoided in new installations; but, if such Rules were made to apply to existing installations, they would entail financial outlay out of proportion to the benefits derived.
>
> "In view of past accident experience resulting in serious injuries at hoistway and car entrances, it is recommended that, as a minimum, the Rules covering safety requirements

Copyright © 2009 by the American Society of Mechanical Engineers.
No reproduction may be made of this material without written consent of ASME.

for hoistway and car doors in this Code be made to also apply to existing elevator installations.

"The accident experience on elevators has also indicated that accidents occur on the older existing equipment, especially with a winding-drum-type machine and where the car safety device and the terminal stopping devices are either absent or inadequate. It is, therefore, recommended that adequate under-car safeties and terminal stopping devices be required for existing installations as well as new installations.

"On the basis of experience supported by accident records, the jurisdictional authority adopting the Code should decide on what requirements, if any, are to be applied to existing installations."

Numerous state and local jurisdictions had taken this advice and developed their own codes for existing installations. The need for a nationally recognized consensus code for existing installations became evident and the ASME A17 Elevator and Escalator Committee undertook the task and issued the first edition of the A17.3 Safety Code for Elevators and Escalators in 1986.

The second edition of the Code incorporated the revisions in A17.3a–1989 as well as additional revisions that appear for the first time in this edition.

The third edition of the Code incorporated the changes made in A17.3a–1991 and A17.3b–1992 as well as the revisions shown in the Summary of Changes. Part VII, Hand Elevator and Part VIII, Sidewalk Elevator, appear for the first time in this edition.

The fourth edition of the Code incorporated the changes made in A17.3a–1994 and A17.3b–1995 as well as the revisions shown in the Summary of Changes. Part X, Private Residence Elevators, and Nonmandatory Appendix D appear for the first time in this edition.

The fifth edition of the Code incorporates the changes made in A17.3a–2000 as well as the revisions shown in the Summary of Changes.

This sixth edition of the Code incorporates the changes made in A17.3–2002 as well as the revisions shown in the Summary of Changes.

The seventh edition of the Code incorporates the changes made in A17.3–2005 as well as the revisions shown in the Summary of Changes.

The following is a list of the final approval dates, dates of issuance, and effective dates for the previous editions and addenda:

Editions and Addenda		Approved	Issued	Effective
First Edition	ASME/ANSI A17.3–1986	February 12, 1986	May 30, 1986	November 30, 1986
Addenda	ASME/ANSI A17.3a–1989	November 10, 1989	December 31, 1989	July 1, 1990
Second Edition	ASME A17.3–1990	October 8, 1990	December 31, 1990	July 1, 1991
Addenda	ASME A17.3a–1991	October 7, 1991	December 12, 1991	June 12, 1992
	ASME A17.3b–1992	October 16, 1992	December 15, 1992	June 16, 1993
Third Edition	ASME A17.3–1993	September 29, 1993	December 31, 1993	July 1, 1994
Addenda	ASME A17.3a–1994	August 18, 1994	November 30, 1994	June 1, 1995
Addenda	ASME A17.3b–1995	August 10, 1995	November 30, 1995	June 1, 1996
Fourth Edition	ASME A17.3–1996	October 3, 1996	February 20, 1997	August 21, 1997
Addenda	ASME A17.3a–2000	January 7, 2000	February 29, 2000	August 30, 2000
Fifth Edition	ASME A17.3–2002	March 12, 2002	July 22, 2002	January 22, 2003
Sixth Edition	ASME A17.3–2005	March 29, 2005	September 30, 2005	March 31, 2006
Seventh Edition	ASME A17.3-2008	July 16, 2008	January 9, 2009	July 9, 2009

Copyright © 2009 by the American Society of Mechanical Engineers.
No reproduction may be made of this material without written consent of ASME.

ASME A17 ELEVATOR AND ESCALATOR COMMITTEE

(May 2008)

STANDARDS COMMITTEE

J. W. Coaker, *Chair*
N. B. Martin, *Vice Chair*
H. E. Peelle, *Vice Chair*
G. A. Burdeshaw, *Staff Secretary*
E. V. Baker, NEIEP
R. E. Baxter, Richard E. Baxter & Associates
K. S. Lloyd, Jr., *Alternate,* Richard E. Baxter & Associates
L. Bialy, Otis Elevator Co.
N. E. Marchitto, *Alternate,* Otis Elevator Co.
J. R. Brooks, North Carolina Department of Labor
J. W. Coaker, Coaker & Co., PC
E. A. Donoghue, Edward A. Donoghue Associates, Inc.
B. D. Black, *Alternate,* BDBlack Codes, Inc.
R. E. Droste, Consultant
J. Filippone, Port Authority of New York and New Jersey
J. H. Humphrey, *Alternate,* Port Authority of New York and New Jersey
C. C. Fox, Rainbow Security Control Ltd.
G. W. Gibson, George W. Gibson & Associates, Inc.
R. A. Gregory, Vertex Corp.
R. F. Hadaller, Technical Standards and Safety Authority
A. P. Juhasz, Kone, Inc.
D. A. Kalgren, Kone, Inc.
D. S. Boucher, *Alternate,* Kone, Inc.
G. A. Kappenhagen, Schindler Elevator Corp.
J. W. Koshak, Thyssenkrupp Elevator Co.
H. Simpkins, *Alternate,* Thyssenkrupp Elevator Co.
N. B. Martin, Chief Elevator Insp. State of Ohio
Z. R. McCain, Jr., McCain Engineering Associates, Inc.
M. V. Farinola, *Alternate,* MV Farinola, Inc.
D. A. McColl, Otis Canada, Inc.
H. E. Peelle, Peelle Co.
S. P. Reynolds, *Alternate,* Peelle Co.
A. Rehman, *Alternate,* Schindler Elevator Corp.
V. P. Robibero, Schindler Elevator Corp.
C. W. Rogler, State of Michigan
R. L. Seymour, Robert L. Seymour & Associates, Inc.
R. S. Seymour, *Alternate,* Robert L. Seymour & Associates, Inc.
D. L. Steel, David L. Steel Escalators
D. L. Turner, Davis L. Turner & Associates
R. S. Caporale, *Alternate,* Elevator World, Inc.
A. H. Verschell, Dwan Elevator
D. M. Winkle, Sr., IUEC Local #14
G. W. Kosinski, *Alternate,* EIWPF
D. A. Witham, GAL

Ex Officio Members

J. W. Coaker, *Chair*
G. A. Burdeshaw, *Staff Secretary*
H. E. Peelle
J. B. Peskuski
J. H. Shull
R. E. Baxter
L. M. Capuano
G. W. Gibson
G. A. Kappenhagen
M. Martin
D. L. Steel
M. Tevyaw
M. R. Tilyou
A. H. Verschell

Honorary Members

G. A. Burdeshaw, *Staff Secretary*
L. J. Blaiotta
W. E. Chamberlain
B. J. Fanguy
H. E. Godwin, Jr.
C. E. Hempel
C. L. Kort
A. A. Mascone
E. M. Philpot
R. L. Rogers
L. E. White
R. W. Young

Regulatory Advisory Council

N. B. Martin, *Chair*
J. R. Brooks, *Vice Chair*
G. A. Burdeshaw, *Staff Secretary*
J. L. Borwey, *Secretary*
G. Antona
J. H. Burpee
J. R. Calpini
P. Caploon
J. Day
N. C. Dimitruck
M. Dorosk
A. N. Griffin
R. F. Hadaller
S. J. Hickory
D. Holmes
I. D. Jay
L. C. Kanicki
M. J. Mellon, Jr.
I. D. Mercer
S. Mercier
K. P. Morse
M. E. Pedersen
J. P. Roche
C. W. Rogler
D. M. Stanlaske
S. F. Stout
L. M. Taylor
L. E. Watson
W. C. Watson
W. J. Witt
D. Melvin, *Alternate*
C. D. Wagner, *Alternate*

NATIONAL INTEREST REVIEW COMMITTEE

G. A. Burdeshaw, *Staff Secretary*
J. P. Andrew
T. D. Barkand
D. M. Begue
M. L. Blankenship
R. J. Blatz
J. E. Brannon
M. T. Brierley
B. B. Calhoun
J. A. Caluori
C. S. Carr
M. A. Chavez
H. J. Clifford
R. F. Dieter
M. L. Lane
W. R. Larsen
B. H. Larson
M. A. Malek
J. J. Mancuso
C. C. Mann
N. E. Marchitto
J. J. Marcusky
D. Mason
J. L. Meyer
T. S. Mowrey
F. G. Newman
J. W. O'Boyle
J. J. O'Donoghue
B. Peyton

Copyright © 2009 by the American Society of Mechanical Engineers.
No reproduction may be made of this material without written consent of ASME.

B. Faerber
J. G. Gerk
L. A. Giovannetti
J. M. Gould
N. R. Herchell
J. E. Herwig
J. M. Imgarten
J. Inglis
T. Isaacs
F. A. Kilian
M. J. Pfeiffer
M. R. Poulin
P. M. Puno
L. S. Rigby
J. R. Runyan
R. D. Schloss
S. Shanes
J. L. Stabler
D. M. Stanlaske
D. A. Swerrie

B44.1/A17.5 ELEVATOR AND ESCALATOR ELECTRICAL EQUIPMENT COMMITTEE

J. H. Shull, *Chair*
M. L. Hite, *Vice Chair*
G. A. Burdeshaw, *Staff Secretary*
M. Dodd, *Secretary*
P. D. Barnhart
J. W. Blain
A. D. Brown
J. D. Busse
J. Caldwell
J. L. Della Porta
I. D. Jay
J. Lee
R. A. Mackenzie
P. F. McDermott
M. Mihai
A. Rehman
J. P. Rennekamp
V. M. Todt
D. A. Donner, *Alternate*
M. L. Jaremko, *Alternate*
J. M. Weber, *Alternate*

DUMBWAITER AND ATD COMMITTEE

J. B. Peskuski, *Chair*
R. Mohamed, *Staff Secretary*
R. A. Gregory
K. Holdcraft
B. P. McCune
C. Milley
D. Witt
R. Kremer, *Alternate*

EARTHQUAKE SAFETY COMMITTEE

G. W. Gibson, *Chair*
M. J. Smith, *Vice Chair*
E. S. Cho, *Staff Secretary*
B. Blackaby
R. E. Droste
J. L. Meyer
W. C. Ribeiro
J. K. Ruth
W. C. Schadrack
A. J. Schiff
A. J. Shelton
D. A. Kalgren, *Alternate*

EDITORIAL COMMITTEE

D. McColl, *Chair*
G. A. Burdeshaw, *Staff Secretary*
B. D. Black
J. Filippone

ELECTRICAL COMMITTEE

A. P. Juhasz, *Chair*
B. Blackaby, *Vice Chair*
J. D. Busse, *Vice Chair*
D. R. Sharp, *Staff Secretary*
T. D. Barkand
P. D. Barnhart
S. H. Benjamin
J. W. Blain
J. Caldwell
J. P. Donnelly
D. K. Prince
P. M. Puno
V. P. Robibero
M. Stergulc
M. Yonemoto
D. Alley, *Alternate*
J. C. Carlson, *Alternate*
J. L. Della Porta, *Alternate*
R. L. Frazier, *Alternate*
S. H. Grainer, *Alternate*
R. E. Droste
R. Elias
S. E. Fisher
G. N. Henry
Y. C. Ho
N. E. Marchitto
P. F. McDermott
T. G. Moskal
A. L. Peck
R. F. Hadaller, *Alternate*
D. Henderson, *Alternate*
M. Miha, *Alternate*
T. H. Nguyen, *Alternate*
J. C. Ramos, *Alternate*
J. P. Rennekamp, *Alternate*
J. H. Shull, *Alternate*
J. M. Weber, *Alternate*

ELEVATORS USED FOR CONSTRUCTION COMMITTEE

N. B. Martin, *Chair*
G. A. Burdeshaw, *Staff Secretary*
R. E. Baxter
C. C. Fox
R. A. Gregory
J. R. Quackenbush
C. W. Rogler

EMERGENCY OPERATIONS COMMITTEE

M. Martin, *Chair*
A. Rehman, *Vice Chair*
A. B. Byk, *Staff Secretary*
M. Abbott
J. Beamish
D. R. Beste
B. D. Black
M. T. Brierley
M. W. Bunker, Jr.
P. Caploon
G. B. Cassini
D. Cook
R. B. Fraser
D. Henderson
D. Holmes
S. R. James
C. Koenig
J. Latham
D. McColl
C. H. Murphy
T. F. Norton
J. J. O'Donoghue
B. F. O'Neill
D. K. Prince
L. F. Richardson
V. Selektor
R. L. Seymour
M. Tevyaw
D. Warne
D. J. Winslow
D. A. Witham
J. C. Carlson, *Alternate*
R. F. Hadaller, *Alternate*
H. Ickes, *Alternate*
J. K. O'Donnell, *Alternate*
G. Rees, *Alternate*
R. Reiswig, *Alternate*
R. J. Roux, *Alternate*
J. Varon, *Alternate*

ESCALATOR AND MOVING WALK COMMITTEE

D. L. Turner, *Chair*
R. Mohamed, *Staff Secretary*
P. E. A. Burge
D. R. Evans
J. Filippone
J. G. Gerk
R. A. Glanzmann
P. L. Hackett
K. M. Harris
H. A. Hausmann
R. Herndobler
J. A. Kinahan
C. Milley
T. G. Moskal
T. R. Nurnberg
J. D. Shupe
K. J. Smith
D. L. Steel
P. J. Welch
D. Winkelhake
C. Anayiotos, *Alternate*
K. A. Apperson, *Alternate*
A. D. Clarke, Jr., *Alternate*
R. E. Creak, *Alternate*
K. G. Hamby, *Alternate*
A. Rehman, *Alternate*
D. E. Rush, *Alternate*
J. C. Steele, *Alternate*
J. E. Tyler, *Alternate*
P. Velasquez, Jr., *Alternate*

EVACUATION GUIDE COMMITTEE

D. L. Turner, *Chair*
R. S. Seymour, *Vice Chair*
G. A. Burdeshaw, *Staff Secretary*
D. Cook
R. E. Fleming
C. C. Fox
J. L. Meyer
J. J. O'Donoghue
C. W. Rogler

Copyright © 2009 by the American Society of Mechanical Engineers.
No reproduction may be made of this material without written consent of ASME.

EXISTING INSTALLATIONS COMMITTEE

D. B. Labrecque, *Chair*
A. B. Byk, *Staff Secretary*
R. E. Baxter
J. Bera
M. L. Blankenship
J. H. Butler
J. D. Carlisle, Jr.
G. B. Cassini
C. J. Duke
A. T. Gazzaniga
J. G. Gerk
R. A. Gregory
J. A. Jaudes
R. Kremer
B. H. Larson
K. S. Lloyd, Jr.
G. M. Losey
Z. R. McCain, Jr.
D. McColl
P. McPartland
N. R. Mistry
R. C. Morrical
G. L. Nyborg
R. L. Phillips
S. A. Quinn
T. Quinn
J. S. Rearick
A. J. Saxer
G. Stiffler
T. Waardenburg
P. J. Welch
L. E. White
V. P. Robibero, *Alternate*
M. Strachan, *Alternate*

HAND AND SIDEWALK ELEVATOR COMMITTEE

R. S. Caporale, *Chair*
G. A. Burdeshaw, *Staff Secretary*
V. G. Bahna
J. Doyle
J. Duffy
G. Greenberg
H. J. Macuga
N. J. Montesano
G. West
J. P. Merkel, *Alternate*

HOISTWAY COMMITTEE

L. M. Capuano, *Chair*
D. McColl, *Vice Chair*
A. B. Byk, *Staff Secretary*
R. Berhinig
B. D. Black
L. J. Blaiotta
D. S. Boucher
R. Brun
F. R. Cooper
G. W. Gibson
H. J. Gruszynski
R. F. Hadaller
J. L. Harding
E. A. Heath
J. R. Johnson
D. P. Kraft
G. Nuschler
H. Peelle
R. Phillips
R. Quinlan
F. Regalado
A. Rehman
S. P. Reynolds
H. Simpkins
S. W. Smith
D. A. Witham
W. Ziegert
L. Bialy, *Alternate*
A. S. Conkling, *Alternate*
M. E. Jagoditz, *Alternate*
M. P. Lamb, *Alternate*
R. K. Leckman, *Alternate*
K. H. Lewis, *Alternate*
W. M. Miller, *Alternate*
M. Tevyaw, *Alternate*
K. Uerling, *Alternate*
J. Varon, *Alternate*

HYDRAULIC COMMITTEE

G. A. Kappenhagen, *Chair*
M. G. Miller, *Vice Chair*
G. A. Burdeshaw, *Staff Secretary*
L. Bialy
P. E. A. Burge
C. C. Fox
R. F. Hadaller
C. W. Rogler
J. N. Rouse
W. M. Shrum, Jr.
H. Simpkins
D. B. Spaethe
J. Strzelec
K. A. Grunden, *Alternate*
J. A. Kennedy, *Alternate*
H. A. Hammerstrom
C. B. Jackson
A. Jahn
T. S. Mowrey
L. S. Rigby
J. W. Koshak, *Alternate*
A. M. McClement, *Alternate*
S. S. Pearson, *Alternate*
A. Rehman, *Alternate*
J. L. Shrum, *Alternate*

INCLINED ELEVATOR COMMITTEE

A. H. Verschell, *Chair*
G. A. Burdeshaw, *Staff Secretary*
J. R. Carrick
R. Elias
T. L. Pope

INSPECTIONS COMMITTEE

M. Tevyaw, *Chair*
J. Filippone, *Vice Chair*
R. Mohamed, *Staff Secretary*
G. Antona
C. Archer
R. E. Baxter
J. R. Brooks
J. W. Coaker
M. V. Farinola
H. S. Frank
R. F. Hadaller
P. Hampton
J. T. Herrity
L. C. Kanicki
J. J. Knolmajer
G. W. Kosinski
K. S. Lloyd, Jr.
Z. R. McCain, Jr.
J. S. Rearick
C. W. Rogler
J. D. Rosenberger
J. R. Runyan
R. D. Schloss
R. S. Seymour
W. M. Snyder
D. M. Stanlaske
J. Strzelec
D. Warne
P. G. Bender, *Alternate*
M. Boutin, *Alternate*
D. McLellan, *Alternate*

INTERNATIONAL STANDARDS COMMITTEE

G. W. Gibson, *Chair*
L. Bialy, *Vice Chair*
G. A. Burdeshaw, *Staff Secretary*
V. Q. Bates
B. Blackaby
R. S. Caporale
R. E. Droste
G. L. Harmon
A. P. Juhasz
G. A. Kappenhagen
J. W. Koshak
V. P. Robibero
D. M. Stanlaske
J. Strzelec
D. L. Turner
T. Derwinski, *Alternate*
D. R. Evans, *Alternate*

LIMITED-USE/LIMITED-APPLICATION ELEVATOR COMMITTEE

R. E. Baxter, *Chair*
D. C. Balmer, *Vice Chair*
R. Mohamed, *Staff Secretary*
P. M. Bass
K. Brinkman
R. G. Buonora
P. Chance
C. C. Fox
M. L. McDonald
C. H. Murphy
R. Murphy
M. W. Schumacher
R. D. Stephens
A. H. Verschell
R. B. Weber
D. M. Winkle, Jr.
G. L. Harmon, *Alternate*
J. L. Mickel, *Alternate*

MAINTENANCE, REPAIR, AND REPLACEMENT COMMITTEE

Z. R. McCain, Jr., *Chair*
R. A. Gregory, *Vice Chair*
K. S. Lloyd, Jr.
G. M. Losey

Copyright © 2009 by the American Society of Mechanical Engineers.
No reproduction may be made of this material without written consent of ASME.

A. B. Byk, *Staff Secretary*
R. E. Baxter
M. L. Blankenship
G. B. Cassini
J. J. DeLorenzi
C. J. Duke
M. V. Farinola
J. Filippone
J. G. Gerk
S. P. Greene
R. F. Hadaller
R. E. Haukeness
A. S. Hopkirk
J. A. Jaudes
R. Kremer
D. B. Labrecque
B. H. Larson
D. McColl
N. R. Mistry
R. C. Morrical
J. Murphy
W. B. Pletch
J. R. Quackenbush
T. Quinn
J. S. Rearick
A. Rehman
V. P. Robibero
A. J. Saxer
R. D. Schloss
J. Strzelec
T. Waardenburg
D. Keller, *Alternate*
J. L. Stabler, *Alternate*

MARINE ELEVATOR COMMITTEE

M. R. Tilyou, *Chair*
G. A. Burdeshaw, *Staff Secretary*
E. J. Crawford
W. D. George
T. J. Ingram
R. Wagner

MECHANICAL DESIGN COMMITTEE

G. W. Gibson, *Chair*
L. Bialy, *Vice Chair*
D. L. Turner, *Vice Chair*
E. S. Cho, *Staff Secretary*
K. A. Apperson
E. V. Baker
R. J. Bolen
C. C. Fox
H. S. Frank
R. F. Hadaller
D. K. Kaczmarek
D. A. Kalgren
K. Konyar
J. W. Koshak
R. Kremer
M. P. Lamb
M. L. Lane
T. G. Moskal
A. Rehman
W. C. Ribeiro
H. Simpkins
C. E. Vlahovic
S. P. Wurth
R. E. Creak, *Alternate*
D. P. Kraft, *Alternate*
R. K. Leckman, *Alternate*
W. C. Schadrack, *Alternate*
P. Winey, *Alternate*

MINE ELEVATOR COMMITTEE

T. D. Barkand, *Chair*
A. B. Byk, *Staff Secretary*
C. D. Barchet
R. M. Bates
W. M. Dietz
A. L. Martin
N. B. Martin
G. L. Miller
H. E. Newcomb
A. J. Saxer
P. E. Fernatt
M. G. Kalich
J. B. Ketchem
D. C. Lewetag
D. J. Shook
R. L. Sidwell
J. K. Taylor

NEW TECHNOLOGY COMMITTEE

J. W. Coaker, *Chair*
G. A. Burdeshaw, *Staff Secretary*
M. H. Bayyari
L. Bialy
A. D. Brown
A. D. Byram
R. S. Caporale
L. M. Capuano
M. Dodd
R. E. Droste
G. W. Gibson
A. N. Griffin
I. D. Jay
A. P. Juhasz
L. C. Kanicki
R. M. Kennedy
J. W. Koshak
G. W. Kosinski
R. H. Laney
K. S. Lloyd, Jr.
D. McColl
M. Mihai
M. Pedram
V. P. Robibero
D. M. Stanlaske
D. L. Turner
R. E. Baxter, *Alternate*
M. Chan, *Alternate*

RACK AND PINION AND SPECIAL PURPOSE PERSONNEL ELEVATOR COMMITTEE

A. J. Marchant, *Chair*
K. M. Harrison, *Vice Chair*
G. A. Burdeshaw, *Staff Secretary*
S. Harris, *Secretary*
D. F. Grund
R. E. Haukeness
R. C. Meiresonne
B. L. O'Neill
P. J. Welch
T. A. Gross, Alternate
J. A. Harrison, Alternate

RESIDENCE ELEVATOR COMMITTEE

A. H. Verschell, *Chair*
P. M. Bass, *Vice Chair*
A. B. Byk, *Staff Secretary*
D. C. Balmer
R. E. Baxter
K. Brinkman
R. G. Buonora
P. Chance
D. J. Degere
P. Edwards
R. Elias
P. Giannis
S. D. Holat
K. H. Lewis
M. Lewis
J. C. Lund
M. L. McDonald
W. M. McKinley
W. M. Middleton
R. Murphy
R. L. Phillips
T. L. Pope
R. D. Stephens
S. S. Duquaine, *Alternate*
G. L. Harmon, *Alternate*
M. J. Holat, *Alternate*
J. L. Mickel, *Alternate*
J. B. Peskuski, *Alternate*

Copyright © 2009 by the American Society of Mechanical Engineers.
No reproduction may be made of this material without written consent of ASME.

PREFACE

GENERAL

This Code is intended to serve as the basis for state and local jurisdictional authorities in adopting retroactive requirements for existing elevators and escalators to enhance the safety of the general public. It is also intended as a standard reference of safety requirements for the guidance of architects, engineers, insurance companies, manufacturers, and contractors, and as a standard of safety practices for building owners and managers of structures where existing elevator equipment covered in the scope of the Code is used.

The purpose of this Code is to establish minimum requirements that will provide a reasonable degree of safety for the general public. While many of these requirements will also increase the degree of safety for the elevator mechanic and inspector, this area has not been specifically addressed at this time.

FORM AND ARRANGEMENT

This Code consists of ten Parts, each covering a specific subject so as to facilitate reference to the requirements.

As an introduction in each Part, the Scope is described to clearly indicate the applicability of the requirements contained therein. Each requirement has been given an appropriate title with a number to facilitate referencing.

The Foreword, Preface, and Appendices that are included in this document have been approved by the A17 Committee, but are not part of this American National Standard.

METRIC (SI) UNITS

This edition of the Code contains metric (SI) units as well as imperial units. The SI units in the text have been directly (soft) converted from the imperial units. The tables and graphs have not been converted; however, the applicable conversion factors are included for each table and graph. Further information on the use of SI units is contained in ASTM E 380, Metric Practice Guide, and ASME Guide SI-1, Orientation and Guide for Use of SI (Metric) Units.

Current committee policy is to have standards published with information in the form that will best serve the needs of Code users. It is not the intent of the Code to favor a design in SI units over one made in imperial units, or conversely. In converting to SI units, an effort has been made to maintain the precision of the original values so that the accuracy of the converted values is neither exaggerated nor understated. Therefore, if there is a difference in the dimensions or the results of calculations between the two systems of units, the imperial units will govern.

RECOMMENDED ADOPTION PROCEDURES

Prior to an adoption of this Code, a public hearing should be held to permit all interested parties to voice objections they may have to particular Rules, and to provide an opportunity for the adopting authority to explain the reasons for such Rules. Many state laws and city ordinances require such hearings but even where not required, it is strongly recommended that hearings be held.

Drafts of the proposed Code should be made available to all interested parties at least 30 days prior to the date set for the public hearing.

The responsibility of complying with this Code rests with the owner of the existing installation. The owner may assign the responsibility to another party by contract. Authorities, in their legislation adopting this Code, should address this subject.

DATE OF APPLICATION

At the time of adoption of the Code, the authority having jurisdiction should determine the date existing installations must conform to the requirements.

It is recommended that a local committee, consisting of representatives of groups directly interested, be appointed to study the existing local conditions and to determine the length of time existing installations should be given between adoption of this Code and compliance with each provision.

Representatives of the following groups should be considered for serving on such a committee:

(a) building owners
(b) real estate management companies
(c) architects and consulting engineers
(d) manufacturers of the equipment
(e) maintenance companies
(f) insurance companies
(g) city and state enforcement officials
(h) elevator labor unions

ASME ELEVATOR PUBLICATIONS

The American Society of Mechanical Engineers (ASME) has developed and published safety codes and

Copyright © 2009 by the American Society of Mechanical Engineers.
No reproduction may be made of this material without written consent of ASME.

Abbreviations Used in This Code

Abbreviation	Unit	Abbreviation	Unit
A	Ampere	lb	pound (mass)
°C	degree Celsius	lbf	pound (force)
deg	degree (angle)	lx	lux
°F	degree Fahrenheit	m	meter
ft/min	foot per minute	m^2	square meter
ft/s	foot per second	m^3	cubic meter
ft	foot	mA	milliampere
fc	footcandle	m/s	meter per second
ft^2	square foot	m/s^2	meter per second per second
ft^3	cubic foot	mm	millimeter
ft/s^2	foot per second per second	mm^2	square millimeter
h	hour	mm^3	cubic millimeter
Hz	hertz	MPa	megapascal
in.	inch	N	Newton
$in.^2$	square inch	psi	pound per square inch
$in.^3$	cubic inch	s	second
kg	kilogram	V	volt
kPa	kilopascal		

standards for elevators, escalators, and related equipment since the first edition of the A17.1, *Safety Code for Elevators and Escalators,* which was published in 1921.

This Code is one of the numerous codes and standards that have been or are being developed by The American Society of Mechanical Engineers.

The following publications are of special interest to users of this Code. For prices and availability, contact:

ASME Order Department
22 Law Drive
Box 2300
Fairfield, NJ 07007-2300
Tel: 800-843-2763
Fax: 973-882-1717
E-Mail: infocentral@asme.org
ASME Website: www.asme.org/catalog

ASME A17.1, Safety Code for Elevators and Escalators. This American National Standard Safety Code covers the design, construction, installation, operation, testing, maintenance, alteration, and repair of elevators, dumbwaiters, escalators, moving walks, and material lifts.

ASME A17.2, Guide for Inspection of Elevators, Escalators, and Moving Walks. This Guide gives detailed procedures for the inspection and testing of elevators, escalators, and moving walks required to conform to the Safety Code for Elevators and Escalators, A17.1–1955 and later editions and the Safety Code for Existing Elevators and Escalators, A17.3. Subsections are arranged to focus on routine and periodic inspection requirements, as well as acceptance criteria.

Inspection Checklists. The checklist forms shown in ASME A17.2 are posted on the ASME website: www.asme.org.

ASME A17 CD-ROM for Elevators and Escalators. This CD-ROM contains the ASME A17.1, A17.2 (A17.2.1, A17.2.2, A17.2.3), and A17.3 standards. In addition, it contains the published interpretations applicable to these standards.

ASME A17.4, Guide for Emergency Personnel. This guide for emergency personnel (fire, police, etc.), building owners, lessees, and building operating managers explains the proper procedures to be used for the safe removal of passengers from stalled cars as well as firefighters' service operating procedures.

CAN/CSA-B44.1/ASME A17.5 Elevator and Escalator Electrical Equipment. This Code contains requirements for obtaining, labeling, and listing of drive machine controllers, logic controllers, and operating devices for stating, stopping, regulating, controlling, or protecting electric motors, generators, and all other electrical equipment, for elevators, escalators, moving walks, dumbwaiters, wheelchair lifts, and stairway lifts.

Published Interpretations. Interpretations of the various A17 standards are published periodically.

Interpretations of A17.1 and A17.2 approved by the A17 Committee from June 14, 1972 through June 1979, were published in a separate book in 1980.

Starting with the 1981 edition of the Code, interpretations are published with each new edition and supplement of the applicable standard. A compilation of Interpretations Nos. 2-13 (June 1979–May 1989) has also been published by ASME. A compilation of all interpretations can also be obtained through the A17 CD-ROM.

ASME A17.1/CSA B44 Handbook. This Handbook augments the ASME A17.1 and CSA B44 Codes with commentary, diagrams, and illustrations that are intended to explain the requirements of these Codes.

The commentary contained in the Handbook is the opinion of the author and has not been approved by the A17 Committee.

Copyright © 2009 by the American Society of Mechanical Engineers.
No reproduction may be made of this material without written consent of ASME.

ASME QEI-1, Standard for the Qualification of Elevator Inspectors. This Standard covers requirements for the qualification and duties of inspectors and inspection supervisors engaged in the inspection and testing of equipment within the scope of the A17.1 Code. It also includes requirements for the accreditation of organizations that certify inspectors and inspection supervisors as meeting the QEI criteria.

ASME A18.1, Safety Standard for Platform Lifts and Stairway Chairlifts. This safety Standard covers the design, construction, installation, operation, inspection, testing, maintenance, and repair of inclined stairway chairlifts and inclined and vertical platform lifts intended for transportation of a mobility impaired person only.

CORRESPONDENCE WITH THE A17 COMMITTEE

ASME codes and standards are developed and maintained with the intent to represent the consensus of concerned interests. As such, users of this and other ASME A17 codes and standards may interact with the committee by requesting interpretations, proposing revisions, and attending committee meetings. Correspondence should be addressed to:

Secretary, A17 Standards Committee
The American Society of Mechanical Engineers
Three Park Avenue
New York, NY 10016
E-mail: infocentral@asme.org

All correspondence to the Committee must include the individual's name and post office address in case the Committee needs to request further information.

Proposing Revisions. Revisions are made periodically to the Code to incorporate changes that appear necessary or desirable, as demonstrated by the experience gained from the application of the procedures, and in order to conform to developments in the elevator art. Approved revisions will be published periodically.

The Committee welcomes proposals for revisions to this Code. Such proposals should be as specific as possible: citing the Section number(s), the proposed wording, and a detailed description of the reasons for the proposal including any pertinent documentation.

Requesting Interpretations. On request, the A17 Committee will render an interpretation of any requirement of the Code. Interpretations can only be rendered in response to a written request sent to the Secretary of the Standards Committee.

The request for interpretation should be clear and unambiguous. It is further recommended that the inquirer submit his request utilizing the following format:

Subject:	Cite the applicable Section number(s) and a concise description.
Edition:	Cite the applicable edition and supplement of the Code for which the interpretation is being requested.
Question:	Phrase the question as a request for an interpretation of a specific requirement suitable for general understanding and use, not as a request for an approval of a proprietary design or situation. The question shall be phrased, where possible, to permit a specific "yes" or "no" answer. The inquirer may also include any plans or drawings that are necessary to explain the question; however, they should not contain proprietary names or information.

Requests that are not in this format will be rewritten in this format by the Committee prior to being answered, which may inadvertently change the intent of the original request.

ASME procedures provide for reconsideration of any interpretation when or if additional information that might affect an interpretation is available. Further, persons aggrieved by an interpretation may appeal to the cognizant ASME committee or subcommittee. ASME does not "approve," "certify," "rate," or "endorse" any item, construction, proprietary device, or activity.

Attending Committee Meetings. The A17 Standards Committee and the various Working Committees regularly hold meetings all of which are open to the public. Persons wishing to attend any meeting should contact the Secretary of the Standards Committee.

Copyright © 2009 by the American Society of Mechanical Engineers.
No reproduction may be made of this material without written consent of ASME.

ASME A17.3-2008
SUMMARY OF CHANGES

Following approval by the ASME A17 Elevator and Escalator Committee, and after public review, ASME A17.3-2008 was approved by the American National Standards Institute on July 16, 2008. It was issued on January 9, 2009 and is effective as of July 9, 2009.

The 2008 edition of ASME A17.3 includes revisions that are identified by a margin note, **(08)**. Changes made to correct errors, as well as other new editorial changes, are identified by **(ED)**. The following is a summary of the latest revisions and changes:

Page	*Location*	*Change*
vi, vii	Foreword	Revised
1–17	1.1.2	Subparagraphs (bb), (cc), and (ee) editorially revised
	Section 1.2	Second paragraph revised
	Section 1.3	Revised in its entirety
	Section 1.4	Revised
18	Table 1.6(a)	Revised
19	Table 1.6(b)	Revised
20, 21	2.1.1(b)	Revised
	2.1.4	(1) Title revised (2) First paragraph redesignated as 2.1.4.1 (3) Subparagraphs (b) through (e) revised (4) 2.1.4.2 added
	2.2.5	Title and first paragraph revised
23, 24	2.6.1(a)	Revised
	2.6.3	Subparagraphs (a), (d), (e), (h), (i), and (i)(2) revised
	2.7.1	Subparagraphs (c)(1) and (c)(2) editorially revised
29, 30	3.4.3	Revised in its entirety
	3.4.4.1	Subparagraph (b)(3) and Note added
35, 36	3.10.1	Revised
	3.10.4(u)	Revised
37	3.10.7	Revised
	3.11.1(a)	Revised
50	6.1.6.1	Subparagraphs (c)(1) and (c)(2) editorially revised
55	7.2.7.1	Editorially revised
56	7.2.11	Revised

Copyright © 2009 by the American Society of Mechanical Engineers.
No reproduction may be made of this material without written consent of ASME.

Page	*Location*	*Change*
64	10.1.2.4	Editorially revised
65	10.2.4.2	Editorially revised
73	Fig. A-3	Revised
74	Fig. A-4	Added
75	Fig. A-5	Added
82–90	Index	Updated

SPECIAL NOTE:

The interpretations to ASME A17.3 issued between January 2005 and January 2008 follow the last page of this edition as a separate supplement, Interpretations No. 7.

Copyright © 2009 by the American Society of Mechanical Engineers.
No reproduction may be made of this material without written consent of ASME.

SAFETY CODE FOR EXISTING ELEVATORS AND ESCALATORS

Part I
Introduction

SECTION 1.1
SCOPE

1.1.1 Equipment Covered by This Code

This Code of safety standards covers existing elevators, escalators, and their hoistways (except as modified by 1.1.2).

(ED) 1.1.2 Equipment Not Covered by This Code

Equipment not covered by this Code includes, but is not limited to, the following:

(a) personnel hoists within the scope of ANSI A10.4

(b) material hoists within the scope of ANSI A10.5

(c) manlifts within the scope of ASME A90.1

(d) mobile scaffolds, towers, and platforms within the scope of ANSI A92

(e) powered platform and equipment for exterior and interior building maintenance within the scope of ASME A120.11

(f) conveyors and related equipment within the scope of ASME B20.1

(g) cranes, derricks, hoists, hooks, jacks, and slings within the scope of ASME B30

(h) industrial trucks within the scope of ASME B56

(i) portable equipment

(j) tiering or piling machines used to move material to and from storage located and operating entirely within one story

(k) equipment for feeding or positioning material at machine tools, printing presses, etc.

(m) skip or furnace hoists

(n) wharf ramps

(p) amusement devices

(q) stage and orchestra lifts

(r) lift bridges

(s) railroad car lifts or dumpers

(t) mechanized parking garage equipment

(u) mine elevators not located in or adjacent to a building or structure

(v) line jacks, false cars, shafters, moving platforms, and similar equipment used for installing an elevator

(w) inclined elevators within the scope of ASME A17.1

(x) special purpose personnel elevators within the scope of ASME A17.1

(y) material lifts and dumbwaiters with automatic transfer devices within the scope of ASME A17.1

(z) screw column elevators within the scope of ASME A17.1

(aa) elevators used for construction within the scope of ASME A17.1

(bb) inclined stairway chairlifts and inclined and vertical wheelchair lifts within the scope of ASME A18.1

(cc) private residence inclined stairway chairlifts and inclined and vertical wheelchair lifts within the scope of ASME A18.1

(dd) rack and pinion elevators within the scope of ASME A17.1

(ee) marine elevators within the scope of ASME A17.1

(ff) rooftop elevators within the scope of ASME A17.1

(gg) limited-use/limited-application elevators within the scope of ASME A17.1

SECTION 1.2 (08)
APPLICATION OF CODE

There are specific requirements for existing installations in this Code that could differ from those found in the latest or previous editions of ASME A17.1 Safety Code for Elevators and Escalators.

Existing installations, as a minimum, shall meet the requirements of this Code or ASME A17.1, Safety Code for Elevators and Escalators; or ASME A17.7/CSA B44.7, Performance Based Safety Code for Elevators and Escalators (see Section 1.3). If an existing installation does not meet the requirements of this Code, it shall be upgraded. If an existing installation was required to meet more stringent requirements, it shall continue to meet those requirements.

Existing installations shall also meet the following requirements in the current edition of ASME A17.1, Safety Code for Elevators and Escalators:

(a) Section 8.1, Security.

(b) Section 8.6, Maintenance, Repair, and Replacement.

Copyright © 2009 by the American Society of Mechanical Engineers.
No reproduction may be made of this material without written consent of ASME.

(c) Section 8.7, Alterations. Alterations, if made, shall conform to the applicable requirements of this Section. The applicable requirements in ASME A17.1, Section 8.7, could be more stringent than the requirements in ASME A17.3. The more stringent of the two shall be adhered to.

(d) Section 8.9, Code Data Plate.

(e) Section 8.10, Acceptance Inspections and Tests. Altered equipment shall comply with the applicable inspection and test requirements of this Section.

(f) Section 8.11, Periodic Inspections and Tests.

(08)

SECTION 1.3
PURPOSE AND EXCEPTIONS

1.3.1 Purpose

The purpose of this Code is to provide for the safety of life and limb, and to promote the public welfare. Compliance with this Code shall be achieved by either of the following:

(a) conformance with the requirements in ASME A17.3

(b) conformance with some of the requirements in ASME A17.3 and for systems, subsystems, components, or functions that do not conform with certain requirements in ASME A17.3, conform with the applicable requirements in A17.1 (see Section 1.2)

(c) conformance with some of the requirements in ASME A17.3 and for systems, subsystems, components, or functions that do not conform with certain requirements in ASME A17.3, conform with the applicable requirements in ASME A17.7/CSA B44.7 (see Section 1.2)

(d) conformance with the requirements in ASME A17.1 (see Section 1.2)

(e) conformance with the requirements in ASME A17.7/CSA B44.7

1.3.2 Exceptions

The provisions of this Code are not intended to prevent the use of systems, methods, or devices of equivalent or superior quality, strength, fire resistance, effectiveness, durability, and safety to those prescribed by this Code, provided that there is technical documentation to demonstrate the equivalency of the system, method, or device.

1.3.2.1 Where a requirement, because of practical difficulty, cannot be complied with literally or where its literal application would cause undue hardship, the authority having jurisdiction shall be permitted, upon proper application, to grant exceptions, but only when it is clearly evident that reasonable safety is ensured.

1.3.2.2 The authority having jurisdiction shall also be permitted to grant exceptions or permit alternate methods where it is ensured that equivalent objectives can be achieved by establishing and maintaining effective safety.

SECTION 1.4
DEFINITIONS

(08)

Section 1.4 defines various terms used in this Code. In addition, some nomenclature and terminology used in the elevator industry and other ASME publications are defined.

access switch: see *hoistway access switch.*

alteration: any change to equipment, including its parts, components, and/or subsystems, other than maintenance, repair, or replacement.

alteration, as a part of an: a repair or replacement that is included with other work that is classified as an alteration.

alternate level: a floor level identified by the building code or fire authority, other than the designated level.

annunciator, car: an electrical device in the car that indicates visually the landings at which an elevator landing signal registering device has been actuated.

applied frame entrance: a wraparound or partial addition to an existing entrance frame used to improve the appearance or to provide the required clearances.

approved: acceptable to the authority having jurisdiction.

authority having jurisdiction: the organization, office, or individual responsible for enforcement of this Code. Where compliance with this Code has been mandated by legislation or regulation, the "authority having jurisdiction" is the regulatory authority (see *regulatory authority).*

authorized personnel: persons who have been instructed in the operation of the equipment and designated by the owner to use the equipment.

automatic transfer device: a power-operated mechanism that automatically moves a load consisting of a cart, tote box, pallet, wheeled vehicle, box, or other similar object from and/or to the car.

auxiliary power lowering device: an alternatively powered auxiliary control system that will, upon failure of the main power supply, allow a hydraulic elevator to descend to a lower landing.

brake, driving machine, elevator, dumbwaiter, or material lift: an electromechanically or electrohydraulically released spring, or gravity applied device, which is part of the electric driving machine of the elevator, dumbwaiter, or material lift used to apply a controlled force at a braking surface to hold or retard the elevator, dumbwaiter, or material lift. See ASME A17.1–2004, Nonmandatory Appendix F.

Copyright © 2009 by the American Society of Mechanical Engineers.
No reproduction may be made of this material without written consent of ASME.

electrohydraulically released: a means of release in which an electric current applied to a solenoid valve or the motor of a hydraulic pump directs pressurized hydraulic fluid to an actuator (such as a hydraulic jack) that overcomes a resisting force (such as a spring) as long as the electric current flows.

electromechanically released: a means of release in which an electric current applied to an actuator (such as a solenoid) causes an electromagnetic force that overcomes a resisting force (such as a spring) as long as the electric current flows.

brake, driving machine, escalator, or moving walk: an electromechanical device that is part of the electric driving machine of the escalator or moving walk, used to apply a controlled force to a braking surface to stop and hold the escalator/moving walk system.

braking, electrically assisted: retardation of the elevator, assisted by energy generated by the driving-machine motor. See ASME A17.1–2004, Nonmandatory Appendix F.

brake, emergency: a mechanical device independent of the braking system used to retard or stop an elevator should the car overspeed or move in an unintended manner. Such devices include, but are not limited to, those that apply braking force on one or more of the following:

(a) car rails
(b) counterweight rails
(c) suspension or compensation ropes
(d) drive sheaves
(e) brake drums

For further information, see ASME A17.1–2004, Nonmandatory Appendix F.

brake, main drive shaft, escalator and moving walk: a device located on the main drive shaft of the escalator or moving walk used to apply a controlled force to the braking surface to stop and hold the escalator or moving walk system.

braking system: driving-machine brake alone, or in combination with electrically assisted braking, which operates to slow down and stop the elevator. See ASME A17.1–2004, Nonmandatory Appendix F.

buffer: a device designed to stop a descending car or counterweight beyond its normal limit of travel by storing or by absorbing and dissipating the kinetic energy of the car or counterweight.

oil buffer: a buffer using oil as a medium, which absorbs and dissipates the kinetic energy of the descending car of counterweight.

gas spring-return oil buffer: an oil buffer utilizing the pressure of a compressed gas to return the buffer plunger or piston to its fully extended position.

mechanical spring-return oil buffer: an oil buffer utilizing the force of the compressed mechanical spring or springs to return the buffer plunger or piston to its fully extended position.

oil buffer stroke: the oil-displacing movement of the buffer plunger or piston, excluding the travel of the buffer plunger accelerating device.

spring buffer: a buffer utilizing one or more springs to cushion the impact force of the descending car or counterweight.

spring buffer load rating: the load required to compress the spring buffer an amount equal to its stroke.

spring buffer stroke: the distance the contact end of the spring can move under a compressive load until all coils are essentially in contact or until a fixed stop is reached.

building code: an ordinance that sets forth requirements for building design and construction, or where such an ordinance has not been enacted, one of the following model codes:

(a) International Building Code (IBC)
(b) Building Construction and Safety Code (NFPA 5000)
(c) National Building Code of Canada (NBCC)

NOTE: Local regulations or laws take precedence. In the absence of local regulation a model building code is applicable.

bumper: a device, other than an oil or spring buffer, designed to stop a descending car or counterweight beyond its normal limit of travel by absorbing the impact.

cable, traveling: see *traveling cable.*

capacity: see *rated load.*

car door interlock: a device having two related and interdependent functions, which are:

(a) to prevent the operation of the driving machine by the normal operating device unless the car door is locked in the closed position

(b) to prevent the opening of the car door from inside the car unless the car is within the landing zone and is either stopped or being stopped

car door or gate, power-closed: a door or gate that is closed by a door or gate power operator.

car door or gate electric contact: an electrical device, the function of which is to prevent operation of the driving machine by the normal operating device unless the car door or gate is in the closed position.

car door or gate power closer: a device or assembly of devices that closes a manually opened car door or gate by power other than hand, gravity, springs, or the movement of the car.

car, dumbwaiter, material lift: the load-carrying unit that includes a platform or transfer device and may include an enclosure and/or car frame.

car, elevator: the load-carrying unit including its platform, car frame, enclosure, and car door or gate.

Copyright © 2009 by the American Society of Mechanical Engineers.
No reproduction may be made of this material without written consent of ASME.

car enclosure: the top and the walls of the car resting on and attached to the car platform.

car frame: the supporting frame to which the car platform, upper and lower sets of guide shoes, car safety, and the hoisting ropes or hoisting rope sheaves, or the plunger or cylinder of a direct-acting elevator, are attached.

car frame, overslung: a car frame to which the hoisting rope fastenings or hoisting rope sheaves are attached to the crosshead or top member of the car frame.

car frame, sub-post: a car frame all of whose members are located below the car platform.

car frame, underslung: a car frame to which the hoisting-rope fastenings or hoisting-rope sheaves are attached at or below the car platform.

car platform: the structure that forms the floor of the car and that directly supports the load.

car platform, laminated: a self-supporting platform constructed of plywood, with a bonded steel sheet facing on both top and bottom surfaces.

car platform frame: a structural frame, composed of interconnecting members, that supports the car platform floor.

car top access panel: a car top access panel is similar in design to a car top emergency exit panel. Used on mine elevators to permit frequent inspection of mine elevator hoistways for damage caused by environmental conditions. Such panels are openable without the use of tools or keys.

NOTE: Subject to the modifications specified in requirement 5.9.14.1(c) of ASME A17.1–2004 .

ceramic permanent magnet: a magnet of the type which has a force that does not deteriorate with time.

certified: see *listed/certified.*

certifying organization: an approved or accredited, independent organization concerned with product evaluation that maintains periodic inspection of production of listed/certified equipment or material and whose listing/certification states whether that equipment meets appropriate standards or has been tested and found suitable for use in a specified manner.

NOTE: For the purpose of this definition, *accredited* means that an organization has been evaluated and approved by an Authorized Agency to operate a Certification/Listing program, and is designated as such in a publication of the Authorized Agency.

chain, suspension (hoisting): chain used to raise and lower a dumbwaiter or material lift car or its counterweight.

chassis: that portion of an inclined elevator that serves as a car frame with weight-bearing guide rollers.

clearance, bottom car: the clear vertical distance from the pit floor to the lowest structural or mechanical part, equipment, or device installed beneath the car platform, except guide shoes or rollers, safety jaw assemblies, and platform or guards, when the car rests on its fully compressed buffers.

clearance, top car, electric elevators: the shortest vertical distance between the top of the car crosshead, or between the top of the car where no crosshead is provided, and the nearest part of the overhead structure of any other obstruction when the car floor is level with the top terminal landing.

clearance, top car, hydraulic elevators: the shortest vertical distance within the hoistway between the horizontal plane described by the top of the car enclosure and the horizontal plane described by the lowest part of the overhead structure or other obstruction when the car floor is level with the top terminal landing.

clearance, top car, inclined elevators: the shortest distance in the direction of travel between the upwardmost portion of the chassis (car frame) and the nearest obstruction when the car is level with the top terminal landing.

clearance, top counterweight: the shortest vertical distance between any part of the counterweight structure and the nearest part of the overhead structure or any other obstruction when the car floor is level with the bottom terminal landing.

comb, escalator and moving walk: the toothed portion of a combplate designed to mesh with a grooved step, pallet, or treadway surface.

combplate, escalator and moving walk: that portion of the landing adjacent to the step, pallet, or treadway consisting of one or more plates to which the combs are fastened.

compensating rope sheave switch: a device that automatically causes the electric power to be removed from the elevator, dumbwaiter, or material lift driving-machine motor and brake when the compensating sheave approaches its upper or lower limit of travel.

compensation means: wire rope, chain, or other mechanical means used to counterbalance, or partially counterbalance, the weight of the suspension ropes.

component rated pressure: the pressure to which a hydraulic component can be subjected.

control, motion: that portion of a control system that governs the acceleration, speed, retardation, and stopping of the moving member.

control, AC motor: a motion control that uses an alternating current motor to drive the machine.

control, AC motor, DC injection: a motion control for an AC motor that produces retardation torque by injecting a DC current into either a stator winding of the motor or a separate eddy-current brake.

Copyright © 2009 by the American Society of Mechanical Engineers.
No reproduction may be made of this material without written consent of ASME.

control, single speed AC: a motion control for an AC motor that has a single synchronous speed.

control, two speed AC: a motion control for an AC motor that has two different synchronous speeds by connecting the motor windings so as to obtain a different number of poles.

control, variable voltage, variable frequency (VVVF): a motion control that changes the magnitude and frequency of the voltage applied to the motor.

control, variable voltage AC (VVAC): a motion control for an AC motor that varies the amount and direction of output torque by controlling the magnitude and phase sequence of the voltage to the motor.

control, DC motor: a motion control that uses a DC motor to drive the machine.

control, dual bridge thyristor converter: a motion control for a DC motor that supplies the armature with variable voltage of either polarity, and is capable of current flow in both directions.

control, generator field: a motion control that is accomplished by the use of an individual generator for each driving-machine motor wherein the voltage applied to the motor armature is adjusted by varying the strength and direction of the generator field current.

control, multivoltage: a motion control that is accomplished by impressing successively on the armature of the driving-machine motor a number of substantially fixed voltages such as may be obtained from multicommutator generators common to a group of elevators.

control, rheostatic: a motion control that is accomplished by varying resistance and/or reactance in the armature and/or field circuit of the driving-machine motor.

control, single bridge thyristor converter: a motion control for a DC motor that supplies the armature with variable voltage of fixed polarity. The field is reversed to control direction and to cause regeneration.

control, electrohydraulic: a motion control in which the acceleration, speed, retardation, and stopping are governed by varying fluid flow to the hydraulic jack.

control, static: a motion control in which control functions are performed by solid-state devices.

control, operation: that portion of a control system that initiates the starting, stopping, and direction of motion, in response to a signal from an operating device.

operation, automatic: operation control wherein the starting of the elevator, dumbwaiter, or material lift car is effected in response to the momentary actuation of operating devices at the landing, and/or of operating devices in the car identified with the landings, and/or in response to an automatic starting mechanism, and wherein the car is stopped automatically at the landings.

operation, group automatic: automatic operation of two or more nonattendant elevators equipped with power-operated car and hoistway doors. The operation of the cars is coordinated by a supervisory control system including automatic dispatching means whereby selected cars at designated dispatching points automatically close their doors and proceed on their trips in a regulated manner. It includes one button in each car for each floor served and "UP" and "DOWN" buttons at each landing (single buttons at terminal landings). The stops set up by the momentary actuation of the car buttons are made automatically in succession as a car reaches the corresponding landing, irrespective of its direction of travel or the sequence in which the buttons are actuated. The stops set up by the momentary actuation of the landing buttons may be accomplished by any elevator in the group, and are made automatically by the first available car that approaches the landing in the corresponding direction.

operation, nonselective collective automatic: automatic operation by means of one button in the car for each landing served and one button at each landing, wherein all stops registered by the momentary actuation of landing or car buttons are made irrespective of the number of buttons actuated or of the sequence in which the buttons are actuated. With this type of operation, the car stops at all landings for which buttons have been actuated, making the stops in the order in which the landings are reached after the buttons have been actuated, but irrespective of its direction of travel.

operation, selective collective automatic: automatic operation by means of one button in the car for each landing served and by "UP" and "DOWN" buttons at the landings, wherein all stops registered by the momentary actuation of the car buttons are made as defined under nonselective collective automatic operation, but wherein the stops registered by the momentary actuation of the landing buttons are made in the order in which the landings are reached in each direction of travel after the buttons have been actuated. With this type of operation, all "UP" landing calls are answered when the car is traveling in the up direction and all "DOWN" landing calls are answered when the car is traveling in the down direction, except in the case of the uppermost or lowermost calls, which are answered as soon as they are reached, irrespective of the direction of travel of the car.

operation, single automatic: automatic operation by means of one button in the car for each landing served and one button at each landing, so arranged that if any car or landing button has been actuated the actuation of any other car or landing operating button will have no effect on the operation of the car until the response to the first button has been completed.

operation, car switch: operation control wherein the movement and direction of travel of the car are directly and solely under the control of the attendant by means of a manually operated car switch or of continuous-pressure buttons in the car.

Copyright © 2009 by the American Society of Mechanical Engineers.
No reproduction may be made of this material without written consent of ASME.

operation, car switch automatic floor-stop: operation in which the stop is initiated by the attendant from within the car with a definite reference to the landing at which it is desired to stop, after which the slowing down and stopping of the elevator is effected automatically.

operation, continuous-pressure: operation control by means of buttons or switches in the car and at the landings, any one of which may be used to control the movement of the car as long as the button or switch is manually maintained in the actuating position.

operation, preregister: operation control in which signals to stop are registered in advance by buttons in the car and at the landings. At the proper point in the car travel, the attendant in the car is notified by a signal, visual, audible, or otherwise, to initiate the stop, after which the landing stop is automatic.

operation, signal: operation control by means of single buttons or switches (or both) in the car, and "UP" or "DOWN" direction buttons (or both) at the landings, by which predetermined landing stops may be set up or registered for an elevator or for a group of elevators. The stops set up by the momentary actuation of the car buttons are made automatically in succession as the car reaches those landings, irrespective of its direction of travel or the sequence in which the buttons are actuated. The stops set up by the momentary actuation of the "UP" and "DOWN" buttons at the landing are made automatically by the first available car in the group approaching the landings in the corresponding direction, irrespective of the sequence in which the buttons are actuated. With this type of operation, the car can be started only by means of a starting switch or button in the car.

control room, elevator, dumbwaiter, material lift: an enclosed control space outside the hoistway, intended for full bodily entry, which contains the motor controller. The room could also contain electrical and/or mechanical equipment used directly in connection with the elevator, dumbwaiter, or material lift but not the electric driving machine or the hydraulic machine [see A17.1, Nonmandatory Appendix Q].

control space, elevator, dumbwaiter, material lift: a space inside or outside the hoistway, intended to be accessed with or without full bodily entry, which contains the motor controller. This space could also contain electrical and/or mechanical equipment used directly in connection with the elevator, dumbwaiter, or material lift but not the electric driving machine or the hydraulic machine [see A17.1, Nonmandatory Appendix Q].

NOTE: See 2.7.6.3.2 for an exception regarding the location of a motor controller.

control system: the overall system governing the starting, stopping direction of motion, acceleration, speed, and retardation of the moving member. See ASME A17.1–2004, Nonmandatory Appendix A.

controller: a device or group of devices that serves to control in a predetermined manner the apparatus to which it is connected.

controller, motion: an operative unit comprising a device or group of devices for actuating the moving member.

controller, motor: the operative units of a motion control system comprising the starter devices and power conversion equipment required to drive an electric motor.

controller, operation: an operative unit comprising a device or group of devices for actuating the motion control.

deck, escalator: see *escalator deck.*

designated attendant: where elevator operation is controlled solely by authorized personnel (attendant service, independent, hospital service, and other similar operations).

designated level: the main floor or other floor level that best serves the needs of emergency personnel for firefighting or rescue purposes identified by the building code or fire authority.

dispatching device, elevator automatic: a device, the principal function of which is to either:

(a) operate a signal in the car to indicate when the car should leave a designated landing, or

(b) actuate its starting mechanism when the car is at a designated landing

displacement switch: a device actuated by the displacement of the counterweight, at any point in the hoistway, to provide a signal that the counterweight has moved from its normal lane of travel or has left its guide rails.

door: the movable portion(s) of an entrance that closes the openings. It consists of one or more solid face panels which are permitted to be equipped with a vision panel.

door, horizontally sliding: a door that moves horizontally.

center-opening: a horizontally sliding door consisting of two panels, so arranged to open away from each other.

center-opening, multiple-speed: a horizontally sliding door consisting of more than two panels, so arranged that the panels or groups of panels open away from each other.

door, folding: a hinged door consisting of two or more panels that fold and move horizontally.

multiple-speed: a horizontally sliding door with two or more panels, so arranged to open away from one side.

single-speed: a one-panel horizontally sliding door.

door or gate, manually operated: a door or gate that is opened and closed by hand.

door or gate, power-operated: a door or gate that is opened and closed by a door or gate power-operator.

Copyright © 2009 by the American Society of Mechanical Engineers.
No reproduction may be made of this material without written consent of ASME.

door or gate, self-closing: a manually opened door or gate that closes when released.

door, swinging: a door that pivots around a vertical axis.

door, vertically sliding: a counterweighted or counterbalanced door consisting of one or more panels that move vertically to open or close.

door, vertically sliding sequence operation: where the opening and closing relationship of the car and hoistway doors do not occur simultaneously.

door, biparting: a vertically sliding door consisting of two or more sections, so arranged that the sections or groups of sections open away from each other.

door, wrap-around: a horizontally sliding door that bends around a car enclosure.

door locked out of service: a hoistway entrance in which the door is mechanically locked by means other than the interlock to prevent the door being opened from the car side without keys or special equipment.

door or gate closer: a device that closes a door or gate by means of a spring or gravity.

door or gate electric contact: an electrical device, the function of which is to prevent operation of the driving machine by the normal operating device unless the door or gate is in the closed position.

door or gate power operator: a device or assembly of devices that opens a hoistway door(s) and/or a car door or car gate by power other than hand, gravity, springs, or the movement of the car; and that closes them by power other than hand, gravity, or the movement of the car.

driving machine: see *machine, driving.*

dumbwaiter: a hoisting and lowering mechanism equipped with a car of limited size which moves in guide rails and serves two or more landings that is used exclusively for carrying materials, and is classified by the following types.

dumbwaiter, hand: a dumbwaiter utilizing manual energy to move the car.

dumbwaiter, power: a dumbwaiter utilizing energy other than gravitational or manual to move the car.

dumbwaiter, electric: a power dumbwaiter where the energy is applied by means of an electric driving machine.

dumbwaiter, hydraulic: a power dumbwaiter where the energy is applied, by means of a liquid under pressure, in a cylinder equipped with a plunger or piston.

dumbwaiter, direct-plunger hydraulic: a hydraulic dumbwaiter having a plunger or cylinder directly attached to the car frame or platform.

dumbwaiter, electrohydraulic: a direct-plunger dumbwaiter where liquid is pumped under pressure directly into the cylinder by a pump driven by an electric motor.

dumbwaiter, maintained-pressure hydraulic: a direct-plunger dumbwaiter where liquid under pressure is available at all times for transfer into the cylinder.

dumbwaiter, roped-hydraulic: a hydraulic dumbwaiter having its piston connected to the car with wire rope.

dumbwaiter, undercounter: a dumbwaiter that has its top terminal landing located underneath a counter.

earthquake protective devices: a device or group of devices that serve to regulate the operation of an elevator or group of elevators in a predetermined manner during or after an earthquake.

electrical/electronic/programmable electronic (E/E/PE): based on electrical (E) and/or electronic (E) and/or programmable electronic (PE) technology.

electrical/electronic/programmable electronic system (E/E/PES): system for control, protection, or monitoring based on one or more electrical/electronic/programmable electronic devices, including all elements of the system such as power supplies, sensors, and other input devices, data highways and other communication paths, and actuators and other output devices. (Ref: IEC 61508 - 4)

NOTE: The term is intended to cover any and all devices or systems operating on electrical principles.

EXAMPLE: Electrical/electronic/programmable electronic devices include

(a) electromechanical devices (electrical)

(b) solid-state nonprogrammable electronic devices (electronic)

(c) electronic devices based on computer technology (programmable electronic)

elevator: a hoisting and lowering mechanism, equipped with a car, that moves within guides and serves two or more landings and is classified by the following types:

NOTE: See requirement 1.1.2 of ASME A17.1–2004, Equipment Not Covered by This Code.

elevator, freight: an elevator used primarily for carrying freight and on which only the operator and the persons necessary for unloading and loading the freight are permitted to ride.

NOTE (elevator, freight): Its use is subject to the modifications specified in Section 2.16 of ASME A17.1–2004.

elevator, hand: an elevator utilizing manual energy to move the car.

elevator, inclined: an elevator that travels at an angle of inclination of 70 deg or less from the horizontal.

elevator, mine: an elevator installed in the mine hoistway, used to provide access to the mine for personnel, materials, equipment, and supplies. To meet the requirements of a mine elevator, the components must be designed and installed in conformance to Part 2 of ASME A17.1–2004, except as modified in Section 5.9 of ASME A17.1–2004. Mine elevators are similar to electric

Copyright © 2009 by the American Society of Mechanical Engineers.
No reproduction may be made of this material without written consent of ASME.

passenger elevators but are modified to operate in the mine environment.

elevator, multicompartment: an elevator having two or more compartments located one above the other.

elevator, observation: an elevator designed to permit exterior viewing by passengers while the car is traveling.

elevator, passenger: an elevator used primarily to carry persons other than the operator and persons necessary for loading and unloading.

elevator, power: an elevator utilizing energy other than gravitational or manual to move the car.

elevator, electric: a power elevator where the energy is applied by means of an electric driving machine.

elevator, hydraulic: a power elevator in which the energy is applied, by means of a liquid under pressure, in a hydraulic jack.

elevator, direct-acting hydraulic: a hydraulic elevator in which the energy is applied by a direct hydraulic driving machine.

elevator, electrohydraulic: a hydraulic elevator in which liquid under pressure is supplied by a hydraulic machine.

elevator, maintained-pressure hydraulic: a direct-acting hydraulic elevator in which liquid under pressure is available at all times for transfer into the hydraulic jack.

elevator, roped-hydraulic: a hydraulic elevator in which the energy is applied by a roped-hydraulic driving machine.

elevator, limited-use/limited-application: a power passenger elevator in which the use and application is limited by size, capacity, speed, and rise.

elevator observation: an elevator that permits exterior viewing by passengers while the car is traveling.

elevator, private residence: a power passenger elevator which is limited in size, capacity, rise, and speed, and is installed in a private residence or in a multiple dwelling as a means of access to a private residence.

elevator, rack-and-pinion: a power elevator with or without a counterweight that is supported, raised, and lowered by a motor or motors which drive a pinion or pinions on a stationary rack mounted in the hoistway.

elevator, rooftop: a power passenger or freight elevator operating between a landing at roof level and landings below. It opens onto the exterior roof level of a building through a horizontal opening.

elevator, screw column: a power elevator having an uncounterweighted car which is supported, raised, and lowered by means of a screw thread.

elevator, shipboard: lifting equipment installed in ships, in offshore drilling rigs, or offshore oil production platforms for the purpose of transporting personnel, maintenance equipment, and ship stores that serves defined landing levels; comprised of an enclosed car running between rigid guides, the dimensions and means of construction of which permit the access of persons.

elevator, sidewalk: an elevator of the freight type operating between a landing in a sidewalk or other exterior area and floors below the sidewalk or grade level. It opens onto the exterior area through a horizontal opening.

elevator, special purpose personnel: an elevator that is limited in size, capacity, and speed, and permanently installed in structures such as grain elevators, radio antenna, bridge towers, underground facilities, dams, power plants, and similar structures to provide vertical transportation of authorized personnel and their tools and equipment only.

elevator, used for construction: an elevator being used temporarily, only for construction purposes.

elevator personnel: persons who have been trained in the construction, maintenance, repair, inspection, or testing of equipment.

emergency personnel: persons who have been trained in the operation of emergency or standby power and firefighters' emergency operation or emergency evacuation.

emergency signal device: a device that can be operated from within the elevator car to inform persons outside the hoistway that help is required.

emergency stop switch: a device located as required and readily accessible for operation, which, when manually operated, causes the electric power to be removed from the driving-machine motor and brake of an electric elevator; or from the electrically operated valves and pump motor of a hydraulic elevator; or of a dumbwaiter; or of a material lift.

endurance limit of a component: the maximum stress that can be alternated or reversed within specified limits without producing fracture of the component material.

enforcing authority: see *authority having jurisdiction* and *regulatory authority.*

engineering test: a test carried out by or witnessed by a registered or licensed professional engineer, testing laboratory, or certifying organization to ensure conformance to Code requirements.

entrance assembly, elevator, dumbwaiter, or material lift: the protective assembly that closes the hoistway openings normally used for loading and unloading, including the door panel(s), gate(s), transom panel, fixed side panel, gibs/guides, sill/sill structure, header, frame, and entrance hardware assembly, if provided.

entrance assembly, horizontally sliding type: an entrance assembly in which the door(s) slides horizontally.

entrance assembly, swinging type: an entrance assembly in which the door(s) swing around vertical hinges.

entrance assembly, vertically sliding type: an entrance assembly in which the door(s) slide vertically.

entrance frame, applied: see *applied frame entrance.*

Copyright © 2009 by the American Society of Mechanical Engineers.
No reproduction may be made of this material without written consent of ASME.

entrance hardware assembly: the track(s), hangers, drive arms, pendant bolts, chains, belts, cables, sheaves, pulleys, hinges, vertically sliding guide shoes, and related hardware that are necessary to suspend and maintain the position of the doors within the entrance assembly.

escalator: power-driven, inclined, continuous stairway used for raising or lowering passengers.

escalator, conventional: an escalator on which the running gear is driven by a single drive shaft at a terminal.

escalator, modular: an escalator on which the running gear along the incline is driven by one or more drive units.

escalator deck: the transverse members of the balustrade, having an interior or exterior section, or both. A high deck is located immediately below the handrail stand. A low deck is located immediately above the skirt panel.

escalator molding: the connecting means between the various portions of the balustrade.

escalator newel: the balustrade termination at the landing.

escalator newel base: the panel located immediately under the newel.

escalator panel, exterior: the panel enclosing the exterior side of the balustrade.

escalator panel, interior: the panel located between the skirt and the escalator high deck or the handrail stand.

escalator skirt: the fixed, vertical panels located immediately adjacent to the steps.

escalator skirt cover, dynamic: the stationary cover that protects the interface between the dynamic skirt panel and the escalator balustrade.

escalator, skirt, dynamic: see *skirt panel, dynamic.*

escalator wellway: an opening in a floor provided for escalator installation between two levels of a building.

escalators, tandem operation: escalators used in series with common intermediate landings.

factor of safety: the ratio of the ultimate strength to the working stress of a member under maximum static loading, unless otherwise specified in a particular requirement.

fail safe: a characteristic of a system or its elements whereby any failure or malfunction affecting safety will cause the system to revert to a state that is known to be safe.

fire barrier: a fire-resistance-rated vertical or horizontal assembly of material designed to restrict the spread of fire in which the openings are protected.

fire endurance: a measure of the elapsed time during which a material or assembly continues to exhibit fire resistance under specified conditions of test and performance, expressed as a fire-resistance rating.

fire-protection rating: a designation indicating the duration of the fire test exposure to which a fire door assembly (entrance) was exposed and for which it met all the acceptance criteria as determined in accordance with a recognized fire test standard. Ratings are stated in hours or minutes.

fire-resistance rating: a designation indicating the duration of the fire test exposure to which components of the building construction (walls, floors, roofs, beams, and columns) are exposed and for which it met all the acceptance criteria as determined in accordance with a recognized fire test standard. Ratings are stated in hours or minutes.

fire-resistive construction: a method of construction that prevents or retards the passage of hot gases or flames, as specified by the building code.

fixed side panel: a panel used to close a hoistway enclosure opening on the side of a hoistway entrance.

flat steps: the distance, expressed in step lengths, that the leading edge of the escalator step travels after emerging from the comb before moving vertically.

gate: the moveable portion(s) of an entrance that closes the opening. A gate has through openings.

horizontally sliding collapsible gate: a series of horizontally sliding vertical members, joined by a scissors-like linkage that allows the assembly to collapse.

horizontally sliding noncollapsible gate: a noncollapsible assembly consisting of one or more sections that slide horizontally.

vertically sliding gate: a counterweighted or counterbalanced assembly, consisting of one or more sections that move vertically to open or close.

gate, semiautomatic: a gate that is opened manually and that is closed automatically as the car leaves the landing.

governor: see *speed governor.*

governor pull-through tension (force): the magnitude of the tensile load developed in the moving governor rope after the governor rope retarding means is actuated.

governor rope retarding means: a mechanical means of developing a sufficient force in the governor rope to activate the car or counterweight safeties or to trip the governor rope releasing carrier, where used. Such mechanical means include, but are not limited to, rope-gripping jaws, clutch mechanisms, and traction arrangements.

handrail stand: the uppermost portion of the balustrade that supports and guides the handrail.

hoistway (shaft), elevator, dumbwaiter, or material lift: an opening through a building or structure for the travel of elevators, dumbwaiters, or material lifts, extending from the pit floor to the roof or floor above.

Copyright © 2009 by the American Society of Mechanical Engineers.
No reproduction may be made of this material without written consent of ASME.

hoistway, blind: the portion of a hoistway where hoistway entrances are not provided.

hoistway, multiple: a hoistway with more than one elevator, dumbwaiter, or material lift.

hoistway, single: a hoistway with a single elevator, dumbwaiter, or material lift.

hoistway, mine: The area within a mine shaft, and its above ground structure required for the elevator equipment, associated supports, and operations, including a minimum of 450 mm (18 in.) around same.

hoistway access switch: a switch, located at a landing, the function of which is to permit operation of the car with the hoistway door at this landing and the car door or gate open, in order to permit access to the top of the car or to the pit.

hoistway door: see *door.*

hoistway door electric contact: see *door or gate electric contact.*

hoistway door or gate locking device: a device that secures a hoistway door or gate in the closed position and prevents it from being opened from the landing side except under certain specified conditions.

hoistway door combination mechanical lock and electric contact: a combination mechanical and electrical device with two related, but entirely independent functions, which are:

(a) to prevent operation of the driving machine by the normal operating device unless the hoistway door is in the closed position

(b) to lock the hoistway door in the closed position and prevent it from being opened from the landing side unless the car is within the landing zone

NOTE: As there is no positive mechanical connection between the electric contact and the door locking mechanism, this device ensures only that the door will be closed, but not necessarily locked, when the car leaves the landing. Should the lock mechanism fail to operate as intended when released by a stationary or retiring car-cam device, the door can be opened from the landing side even though the car is not at the landing. If operated by a stationary car-cam device, it does not prevent opening the door from the landing side as the car passes the floor.

hoistway door interlock: a device having two related and interdependent functions, which are

(a) to prevent the operation of the driving machine by the normal operating device unless the hoistway door is locked in the closed position

(b) to prevent the opening of the hoistway door from the landing side unless the car is within the landing zone and is either stopped or being stopped

hoistway door interlock retiring cam device: a device that consists of a retractable cam and its actuating mechanism and that is entirely independent of the car door or hoistway door power operator.

hoistway gate separate mechanical lock: a mechanical device the function of which is to lock a hoistway gate in the closed position after the car leaves a landing and prevent the gate from being opened from the landing side unless the car is within the landing zone.

hoistway enclosure: the fixed structure, consisting of vertical walls or partitions, that isolates the hoistway from all other areas or from an adjacent hoistway and in which entrances are installed.

hoistway gate: usually a counterweighted (counterbalanced) assembly, consisting of one or more sections that are guided in the vertical direction to open or close. The gate may be of wood or metal construction. Wood gates may consist of either horizontal or vertical slats. Metal gates are usually constructed of perforated or expanded metal.

hospital service: a special case of operation by a designated attendant used only for medical emergencies.

hydraulic jack: a unit consisting of a cylinder equipped with a plunger (ram) or piston, which applies the energy provided by a liquid under pressure.

hydraulic machine: a unit consisting of pump, motor, valves, and associated internal piping, which converts electrical energy and supplies it as a liquid under pressure.

in-car stop switch: a device located in the car and accessible for operation by elevator personnel only, which, when manually operated, causes the electric power to be removed from the driving-machine motor and brake of an electric elevator or from the electrically operated valves and pump motor of a hydraulic elevator.

inclined elevator: see *elevator, inclined.*

installation: a complete elevator, dumbwaiter, escalator, material lift, or moving walk, including its hoistway, hoistway enclosures and related construction, and all machinery and equipment necessary for its operation.

installation, existing: an installation that has been completed or is under construction prior to the effective date of this Code.

installation, new: any installation not classified as an existing installation by definition, or an existing elevator, dumbwaiter, escalator, material lift, inclined lift, or moving walk moved to a new location subsequent to the effective date of this Code.

intended car movement: controlled movement of an elevator car, including starting, leveling, running, and stopping, due to

(a) operation control

(b) motion control

(c) continuous pressure on an operating device during inspection operation, inspection operation with open door circuits, or hoistway access operation.

NOTE: "Stopping" includes movement of an elevator car towards rest once stopping is initiated, and any movement of an elevator car due to suspension system elasticity that occurs after the brake is set, since this movement was the result of the intended operation.

Copyright © 2009 by the American Society of Mechanical Engineers.
No reproduction may be made of this material without written consent of ASME.

interlock: see *car door interlock* and *hoistway door interlock.*

labeled/marked: equipment or material to which has been attached a label, symbol, or other identifying mark of an approved or accredited independent certifying organization, concerned with product evaluation, that maintains periodic inspection of production of labeled/marked equipment or material, and by whose labeling/marking the manufacturer indicates compliance with appropriate standards or performance in a specified manner.

NOTE: For the purpose of this definition, *accredited* means that an organization has been evaluated and approved by an Authorized Agency to operate a Certification/Listing program, and is designated as such in a publication of the Authorized Agency.

landing, dumbwaiter: that portion of a floor, balcony, platform, or landing door used to discharge and receive materials.

landing, bottom terminal: the lowest landing served by the dumbwaiter that is equipped with a hoistway entrance.

landing, top terminal: the highest landing served by the dumbwaiter that is equipped with a hoistway entrance.

landing, elevator or material lift: that portion of a floor, balcony, or platform used to receive and discharge passengers or freight.

landing, bottom terminal: the lowest landing served by the elevator or material lift that is equipped with a hoistway entrance.

landing, top terminal: the highest landing served by the elevator or material lift that is equipped with a hoistway entrance.

landing, escalator or moving walk: the stationary area at the entrance to or exit from an escalator, a moving walk, or moving walk system.

landing, lower, escalator: that landing of least elevation of the two landings.

landing, lower, moving walk: that landing of least elevation of the two landings. On moving walks where the two landings are of equal elevation, the lower landing is that landing designated by the manufacturer.

landing, upper, escalator: that landing of greatest elevation of the two landings.

landing, upper, moving walk: that landing of greatest elevation of the two landings. On moving walks where the two landings are of equal elevation the upper landing is that landing designated by the manufacturer.

landing, next available: the first landing in the direction of travel that the elevator is electrically and mechanically capable of serving with a normal slowdown and stop.

landing zone: a zone extending from a point 450 mm (18 in.) below a landing to a point 450 mm (18 in.) above the landing.

left, right convention: left and right designations of escalator and moving walk components are determined by facing the equipment at the lower landing.

leveling: controlled car movement toward the landing, within the leveling zone, by means of a leveling device, which vertically aligns the car platform sill relative to the hoistway landing sill to attain a predetermined accuracy.

leveling device, elevator, dumbwaiter, or material lift car: the portion of a motion control system comprised of a device or group of devices that, either automatically or under control of the operator, initiates leveling, and automatically stops the car at the landing.

leveling device, anticreep: a leveling device used on hydraulic elevators to correct automatically a change in car level caused by leakage or contraction of fluid in the hydraulic system.

leveling device, inching: a leveling device that is controlled by the operator by means of continuous-pressure switches.

leveling device, one-way automatic: a device that corrects the car level only in case of under-run of the car, but will not maintain the level during loading and unloading.

leveling device, two-way automatic maintaining: a device that corrects the car level on both under-run and over-run, and maintains the level during loading and unloading.

leveling device, two-way automatic nonmaintaining: a device that corrects the car level on both under-run and over-run, but will not maintain the level during loading and unloading.

leveling zone: the limited distance above or below an elevator, dumbwaiter, or material lift landing within which the leveling device is permitted to cause movement of the car toward the landing.

listed/certified: equipment or materials accepted for inclusion in a publication by a certifying organization.

NOTE: The means for identifying *listed/certified* equipment may vary for each organization concerned with product evaluation, some of which do not recognize equipment as listed/certified unless it is also labeled/marked. The authority having jurisdiction utilizes the system employed by the listing/certifying organization to identify a listed/certified product.

load, dynamic: the load applied as a result of acceleration or deceleration.

load, impact: a suddenly applied load.

load, static: the load applied as a result of the weight.

lower landing, escalator: see *landing, lower, escalator.*

lower landing, moving walk: see *landing, lower, moving walk.*

machine, driving: the power unit that applies the energy necessary to drive an elevator or other equipment covered by the scope of this Code.

driving machine, electric: a driving machine in which the energy is applied by an electric motor. It includes the

Copyright © 2009 by the American Society of Mechanical Engineers.
No reproduction may be made of this material without written consent of ASME.

motor, driving-machine brake, and the driving sheave or drum, together with its connecting gearing, belt, or chain, if any. See ASME A17.1–2004, Nonmandatory Appendix F.

driving machine, direct: an electric driving machine, the motor of which is directly connected mechanically to the driving sheave, drum, or shaft without the use of belts or chains, either with or without intermediate gears.

geared driving machine: a direct driving machine in which the energy is transmitted from the motor to the driving sheave, drum, or shaft through gearing.

winding drum machine: a geared driving machine in which the suspension ropes are fastened to and wind on a drum.

traction machine: a direct driving machine in which the motion of a car is obtained through friction between the suspension ropes and a traction sheave.

geared traction machine: a geared-drive traction machine.

gearless traction machine: a traction machine, without intermediate gearing, that has the traction sheave and the brake drum mounted directly on the motor shaft.

worm-geared machine: a direct driving machine in which the energy from the motor is transmitted to the driving sheave or drum through worm gearing.

driving machine, indirect: an electric driving machine, the motor of which is connected indirectly to the driving sheave, drum, gear reducer, or shaft by means of a belt drive or chain drive.

belt driving machine: an indirect driving machine equipped with a belt system as the connecting means.

chain driving machine: an indirect driving machine with a chain system as the connecting means.

driving machine, rack-and-pinion: an electric driving machine in which the motion of the car is obtained by a power-driven rotation pinion(s) mounted on the car, traveling on a stationary rack mounted in the hoistway.

driving machine, screw: an electric driving machine, the motor of which drives a nut on a vertical screw or rotates a vertical screw to raise or lower an elevator car.

driving machine, chain, dumbwaiter or material lift: a driving machine in which the motion of a car is obtained through a connection between a driven sprocket and the suspension chains.

driving machine, hydraulic: a driving machine in which the energy is provided by a hydraulic machine and applied by a hydraulic jack.

chain-hydraulic drive machine: a hydraulic driving machine in which the drive member of the hydraulic jack is connected to the car by chains or indirectly coupled to the car by means of chains and sprockets.

direct hydraulic driving machine: a hydraulic driving machine in which the driving member of the hydraulic jack is directly attached to the car frame or platform.

roped-hydraulic driving machine: a hydraulic driving machine in which the driving member of the hydraulic jack is connected to the car by wire ropes or indirectly coupled to the car by means of wire ropes and sheaves. It includes multiplying sheaves, if any, and their guides.

machine room and control room, remote, elevator, dumbwaiter, material lift: a machine room or control room that is not attached to the outside perimeter or surface of the walls, ceiling, or floor of the hoistway [see A17.1, Nonmandatory Appendix Q].

machine room, elevator, dumbwaiter, material lift: an enclosed machinery space outside the hoistway, intended for full bodily entry, which contains the electric driving machine or the hydraulic machine. The room could also contain electrical and/or mechanical equipment used directly in connection with the elevator, dumbwaiter, or material lift [see A17.1, Nonmandatory Appendix Q].

machinery space, elevator, dumbwaiter, material lift: a space inside or outside the hoistway, intended to be accessed with or without full bodily entry, which contains elevator, dumbwaiter or material lift mechanical equipment, and could also contain electrical equipment used directly in connection with the elevator, dumbwaiter, or material lift. This space could also contain the electric driving machine or the hydraulic machine [see A17.1, Nonmandatory Appendix Q].

machinery space and control space, remote, elevator, dumbwaiter, material lift: a machinery space or control space that is not within the hoistway, machine room, or control room, and that is not attached to the outside perimeter or surface of the walls, ceiling, or floor of the hoistway [see A17.1, Nonmandatory Appendix Q].

main floor: the floor providing normal egress from a building.

maintained pressure: the hydraulic pressure between the pressure source and the control valves of a maintained pressure hydraulic elevator.

maintenance: a process of routine examination, lubrication, cleaning, and adjustment of parts, components, and/or subsystems for the purpose of ensuring performance in accordance with the applicable Code requirements. (See also *repair* and *replacement*.)

manually (manual) reset, elevator:

(a) type or feature of an elevator part or component that, when actuated, requires intervention of a person in order to reinstate it to its nonactuated state.

(b) type of action required to be taken by a person to reinstate an elevator part or component from an actuated state to its nonactuated state.

manual reset, escalator and moving walk: a means, not accessible to the general public, requiring personal intervention by an authorized person prior to restarting the escalator or moving walk.

Copyright © 2009 by the American Society of Mechanical Engineers.
No reproduction may be made of this material without written consent of ASME.

material lift: a hoisting and lowering mechanism normally classified as an elevator, equipped with a car which moves within a guide system installed at an angle of greater than 70 deg from the horizontal, serving two or more landings, for the purpose of transporting materials which are manually or automatically loaded or unloaded. Material lifts without an automatic transfer device are Type A or Type B. On Type A material lifts no persons are permitted to ride. On Type B material lifts authorized personnel are permitted to ride.

may: indicates permission, not a mandatory requirement.

mechanical lock: see *hoistway door combination mechanical lock and electric contact* and *hoistway gate separate mechanical lock.*

mode of operation: a way in which a safety-related system is intended to be used, with respect to the rate of demands made upon it, which may be either of the following:

(a) low demand mode, where the frequency of demands for operation made on an electrical safety function is no greater than one per year and no greater than twice the proof-test frequency;

(b) high demand or continuous mode, where the frequency of demands for operation made on a safety-related system is greater than one per year or greater than twice the proof-test frequency.

NOTE: High demand or continuous mode covers those safety-related systems that implement continuous control to maintain functional safety.

(c) proof-test, a periodic test performed to detect failures in a safety-related system so that, if necessary, the system can be restored to an "as new" condition or as close as practical to this condition.

NOTE: See IEC 61508 – 4, Clause 3.8.5, for additional information on this definition.

modernization: see *alteration.*

module: the increment of rise in a modular escalator that one drive unit is capable of powering.

molding, escalator: see *escalator molding.*

moving walk: a type of passenger-carrying device on which passengers stand or walk, and in which the passenger-carrying surface remains parallel to its direction of motion and is uninterrupted.

moving walk, belt pallet type: a moving walk with a series of connected and power-driven pallets to which a continuous belt treadway is fastened.

moving walk, belt type: a moving walk with a power-driven continuous belt treadway.

moving walk, edge-supported belt type: a moving walk with the treadway supported near its edges by a succession of rollers.

moving walk, pallet type: a moving walk with a series of connected and power-driven pallets that together constitute the treadway.

moving walk, roller-bed type: a moving walk with the treadway supported throughout its width by a succession of rollers.

moving walk, slider-bed type: a moving walk with the treadway sliding upon a supporting surface.

moving walk newel: the balustrade termination at the landing.

moving walk newel base: the panel located immediately under the newel.

moving walk wellway: an opening in a floor provided for moving walk installation.

newel, escalator: see *escalator newel.*

newel, moving walk: see *moving walk newel.*

newel base, escalator: see *escalator newel base.*

newel base, moving walk: see *moving walk newel base.*

nonstop switch, elevator: a switch that, when operated, will prevent the elevator from making registered landing stops.

normal stopping means: that portion of the operation control that initiates stopping of the car in normal operation at landings.

operating device: the car switch, push buttons, key or toggle switches, or other devices used to actuate the operation control.

operating speed in the down direction: the speed at which a hydraulic elevator, dumbwaiter, or material lift is set to lower with rated load.

operation, inspection: a special case of continuous-pressure operation used for troubleshooting, maintenance, repair, adjustments, rescue, and inspection.

overhead structure: all of the structural members, walls, platforms, etc., supporting the elevator machinery, sheaves, and equipment at the top of the hoistway.

pallet, moving walk: one of a series of rigid platforms that together form an articulated treadway or the support for a continuous treadway.

panel, exterior escalator: see *escalator panel, exterior.*

panel, interior escalator: see *escalator panel, interior.*

parking device, elevator: an electrical or mechanical device, the function of which is to permit the opening of the hoistway door from the landing side when the car is within the landing zone of that landing. The device may also be used to close the door.

penetrate a floor: to pass through or pierce a floor in such a way that the opening has a continuous perimeter and is provided only to allow the equipment to pass through the floor.

Copyright © 2009 by the American Society of Mechanical Engineers.
No reproduction may be made of this material without written consent of ASME.

periodic tests, category: a grouping of tests performed at common time intervals required by the authority having jurisdiction.

Phase I Emergency Recall Operation: the operation of an elevator where it is automatically or manually recalled to the recall level and removed from normal service because of activation of firefighters' emergency operation.

Phase II Emergency In-Car Operation: the operation of an elevator by firefighters where the elevator is under their control.

piston: a short cylindrical member that is provided with a sealing means that travels with the member within a hydraulic cylinder. Pistons may be coupled to the elevator, dumbwaiter, or material lift by a coupling means that passes through a sealing means provided in the cylinder head.

piston, rod: the coupling means between the piston and its driven member.

pit, dumbwaiter, material lift: the portion of a hoistway extending from the floor level of the bottom terminal landing to the floor at the bottom of the hoistway.

pit, elevator: the portion of a hoistway extending from the sill level of the bottom terminal landing to the floor at the bottom of the hoistway.

plunger (ram): a long cylindrical compression member that is directly or indirectly coupled to the car frame. This member is not provided with a sealing means. Where used in assembly with a cylinder, the sealing means is provided on the cylinder head. In the case of telescopic plungers and cylinders, a sealing means may be used in the moving plunger, that is also a cylinder.

plunger gripper: a mechanical device attached to a supporting structure in the pit, which stops and holds the car by gripping the plunger.

position indicator: a device that indicates the position of the elevator, dumbwaiter, or material lift car in the hoistway. It is called a hall position indicator when placed at a landing or a car position indicator when placed in the car.

power unit, hydraulic: see *hydraulic machine.*

pressure piping: the piping for a hydraulic elevator between the pump and the hydraulic jack.

private residence: a separate dwelling or a separate apartment in a multiple dwelling which is occupied only by the members of a single family unit.

private residence elevator: see *elevator.*

rated load, elevator, dumbwaiter, material lift, or escalator: the load that the equipment is designed and installed to lift at the rated speed.

rated load, moving walk: the load that the moving walk is designed and installed to move, horizontally or at an incline, at the rated speed.

rated load performance: the operation of the elevator with its rated load at rated speed.

rated speed: the speed at which the elevator, dumbwaiter, escalator, moving walk, or material lift is designed to operate under the following conditions:

elevator, dumbwaiter, or material lift: the speed in the up direction with rated load in the car. (See also *operating speed in the down direction.)*

escalator: the rate of travel of the steps, measured along the centerline of the steps in the direction of travel, with rated load on the steps. In the case of a reversible escalator, the rated speed shall be the rate of travel of the steps in the up direction, measured along the centerline of the steps on the incline, with rated load on the steps.

moving walk: the rate of travel of the treadway, horizontally or at an incline, with rated load on the treadway. In the case of reversible inclined moving walks, the rated speed is the rate of travel of the treadway in the up direction, measured along the centerline of the treadway surface in the direction of travel, with rated load on the treadway.

readily accessible: capable of being reached quickly for operation, renewal, or inspection, without requiring those to whom ready access is a requisite to climb over or remove obstacles or resort to portable ladders, chairs, etc.

recall level: the designated or alternate level that cars are returned to when Phase I Emergency Recall Operation is activated.

recycling operation, telescope plunger: an operation for restoring the relative vertical positions of the multiple plungers in a telescoping plunger arrangement.

regulatory authority: the person or organization responsible for the administration and enforcement of the applicable legislation or regulation governing the design, construction, installation, operation, inspection, testing, maintenance, or alteration of equipment covered by this Code. (See also *authority having jurisdiction.*)

rehabilitation: see *alteration; maintenance; repair;* and *replacement.*

releasing carrier, governor rope: a mechanical device to which the governor rope may be fastened, calibrated to control the activation of a safety at a predetermined tripping force.

repair: reconditioning or renewal of parts, components, and/or subsystems necessary to keep equipment in compliance with applicable Code requirements. (See also *replacement* and *maintenance.*)

replacement: the substitution of a device or component and/or subsystems, in its entirety, with a unit that is basically the same as the original for the purpose of ensuring performance in accordance with applicable Code requirements. (See also *repair* and *maintenance.*)

Copyright © 2009 by the American Society of Mechanical Engineers.
No reproduction may be made of this material without written consent of ASME.

restricted area: (applicable to Part 7 of ASME A17.1–2004) an area accessible only to authorized personnel who have been instructed in the use and operation of the equipment.

rise: the vertical distance between the bottom terminal landing and the top terminal landing of an elevator, dumbwaiter, or material lift.

rise, escalator and moving walk: the vertical distance between the top and bottom landings of the escalator or moving walk.

rope, aircraft cable: a wire rope built for a special purpose having special flexibility properties, zinc-coating, high breaking strength, and antirust qualities. Designed originally for use with aircraft controls.

rope, car counterweight: wire rope used to connect the car and counterweight that does not pass over the driving means.

rope, counterweight: wire rope used to raise and lower the counterweight on an electric elevator, dumbwaiter, or material lift having a winding drum machine.

rope, governor: wire rope with at least one end fastened to the safety activating means or governor rope releasing carrier, passing over and driving the governor sheave, and providing continuous information on the speed and direction of the car or counterweight.

rope, safety drum (also known as "Tail rope" and "Minne Line"): a corrosion-resistant wire rope used to connect the governor rope to the safety. Primarily used with wedge clamp safeties.

rope, suspension (hoisting): wire rope used to raise and lower an elevator, dumbwaiter, or material lift car or its counterweight, or both.

rope equalizer, suspension: a device installed on an elevator, dumbwaiter, or material lift car or counterweight to equalize automatically the tensions in the suspension wire ropes.

rope-fastening device, auxiliary: a device attached to the car or counterweight or to the overhead dead-end rope-hitch support that will function automatically to support the car or counterweight in case the regular wire rope fastening fails at the point of connection to the car or counterweight or at the overhead dead-end hitch.

rope sprocket drive: a driving means consisting of wire rope with fixed links at constant intervals throughout its length. The links engage in slots on a grooved drive cog to provide a positive drive force.

runby, bottom, elevator car: the distance between the car buffer striker plate and the striking surface of the car buffer when the car floor is level with the bottom terminal landing.

runby, bottom, elevator counterweight: the distance between the counterweight buffer striker plate and the striking surface of the counterweight buffer when the car floor is level with the top terminal landing.

runby, top, direct-plunger hydraulic elevator: the distance the elevator car can run above its top terminal landing before the plunger strikes its mechanical stop.

running gear, escalator: all the components of an escalator moving along the tracks.

running gear, moving walk: all the components of a moving walk moving along the tracks.

safety, car or counterweight: a mechanical device attached to the car, car frame, or to an auxiliary frame; or to the counterweight or counterweight frame; to stop and hold the car or counterweight under one or more of the following conditions: predetermined overspeed, free fall, or if the suspension ropes slacken.

safety, self-resetting: a car or counterweight safety released and reset by movement in the up direction.

safety bulkhead: a closure at the bottom of the cylinder located above the cylinder head and provided with an orifice for controlling the loss of fluid in the event of cylinder head failure.

safety integrity level (SIL): discrete level (one out of a possible four) for specifying the safety integrity requirements of the safety functions to be allocated to the E/E/PE safety-related system, where safety integrity level 4 has the highest level of safety integrity and safety integrity level 1 has the lowest.

screw column: a vertical structural member provided with screw threads that support the car of a screw column elevator, dumbwaiter, or material lift. The screw column may be either in tension or compression.

seismic switch: a device activated by ground movement to provide a signal that a potentially damaging earthquake is imminent.

sequence operation: see *door, vertically sliding sequence operation.*

shaft: see *hoistway.*

shall: indicates a mandatory requirement.

should: indicates a recommendation, not a mandatory requirement.

sight guard: a vertical member mounted on the hoistway side of the leading edge of the hoistway door. It is used to reduce the opening between the leading edges of the hoistway door and the car door.

signal device, elevator car flash: one providing a signal light in the car, which is illuminated when the car approaches the landings at which a landing signal registering device has been actuated.

signal registering device, elevator landing: a button or other device located at the elevator landing, which, when actuated by a waiting passenger, causes a stop signal to be registered in the car.

Copyright © 2009 by the American Society of Mechanical Engineers.
No reproduction may be made of this material without written consent of ASME.

signal system, elevator separate: one consisting of buttons or other devices located at the landings, which, when actuated by a waiting passenger, illuminates a flash signal or operates an annunciator in the car indicating floors at which stops are to be made.

signal transfer device, elevator automatic: a device by means of which a signal to be registered in a car is automatically transferred to the next car following, in case the first car passes a floor for which a signal has been registered without making a stop.

signal transfer switch, elevator: a manually operated switch, located in the car, by means of which the operator can transfer a signal to the next car approaching in the same direction, when the operator desires to pass a floor at which a signal has been registered in the car.

skirt, escalator: see *escalator skirt.*

skirt panel, dynamic: the moving vertical panels, with a positive mechanical connection to the running gear, adjacent to, and moving with the steps.

slack-rope switch: a device that automatically causes the electric power to be removed from the elevator driving machine motor and brake when the suspension ropes of a winding drum machine become slack.

sleeving (liner): the insertion of a smaller diameter cylinder inside the existing cylinder of a hydraulic jack.

sling: see *car frame.*

slope, moving walk: the angle that the centerline of the treadway makes with the horizontal.

software system failure: a behavior of the software, including its support (host) hardware, that is not in accordance with the intended function.

solid-state device: an element that can control current flow without moving parts.

speed governor: a continuously operating speed monitoring and detection device that, at predetermined speeds, provides signals to the controller and imparts a retarding force to activate the car or counterweight safety.

speed governor, escalator and moving walk: a continuously operating speed monitoring and detection device that, at predetermined speeds, provides signals to the controller to stop the escalator or moving walk.

starters control panel, elevator: an assembly of devices by means of which the starter may control the manner in which an elevator or group of elevators function.

static switching: switching of circuits by means of solid-state devices.

tandem operation escalators: see *escalators, tandem operation.*

terminal landing: see *landing, elevator or material lift.*

terminal speed-limiting device, emergency: a device that automatically reduces the car and counterweight speed to within the rated buffer striking speed prior to buffer engagement.

terminal speed reducing device, hydraulic: a device on hydraulic elevators that will reduce the speed prior to contacting the stop ring in the up direction.

terminal stopping device, emergency: a device that automatically causes the power to be removed from the driving machine motor and brake if the car fails to slow down as intended when approaching the terminal landing.

terminal stopping device, final: a device that automatically causes the power to be removed from a driving-machine motor and brake, or from a hydraulic machine, independent of the functioning of the normal stopping means, normal terminal stopping device, and any emergency terminal speed-limiting device, after the car has passed a terminal landing.

terminal stopping device, machine final (stop-motion switch): final terminal stopping device operated directly by the driving machine.

terminal stopping device, normal: device(s) to slow down and stop an elevator, dumbwaiter, or material lift car automatically at or near a terminal landing, independently of the functioning of the normal stopping means.

threshold comb, moving walk: see *comb, escalator and moving walk.*

threshold plate, moving walk: see *combplate, escalator and moving walk.*

transom: a panel or panels used to close a hoistway enclosure opening above a hoistway entrance.

travel: see *rise.*

traveling cable: a cable made up of electric conductors, which provides electrical connection between an elevator, dumbwaiter, material lift car, or counterweight, and a fixed outlet in the hoistway or machine room.

treadway, moving walk: the passenger-carrying member of a moving walk.

truck zone, elevator: the limited distance above an elevator landing within which the truck zoning device permits movement of the elevator car.

truck zoning device, elevator: a device that will permit the operator in the car to move a freight elevator within the truck zone with the car door or gate and a hoistway door open.

type test: a test carried out by or witnessed by a certifying organization concerned with product evaluation and the issuing of certificates to ensure conformance to Code requirements.

Copyright © 2009 by the American Society of Mechanical Engineers.
No reproduction may be made of this material without written consent of ASME.

unintended car movement: any movement of an elevator car that is not intended car movement resulting from a component or system failure.

unlocking device, hoistway door: a mechanical device, the function of which is to unlock and permit the opening of a hoistway door from a landing irrespective of the position of the car.

unlocking zone: a zone extending from the landing floor level to a point not less than 75 mm (3 in.) nor more than 450 mm (18 in.) above and below the landing.

upper landing, escalator: see *landing, upper, escalator.*

upper landing, moving walk: see *landing, upper, moving walk.*

valley break: a broken wire in a wire rope in which the outside wire of a strand breaks in the immediate vicinity of the point where it contacts a wire or wires of an adjacent strand, generally at a point not visible when the wire rope is examined externally. One end of the broken wire is long enough to reach from one valley to the next one and the other end of the broken wire generally cannot be seen.

valve, overspeed: a device installed in the pressure piping of a hydraulic elevator, between the hydraulic machine and the hydraulic jack, which restricts and ceases oil flow from the hydraulic jack through the pressure piping when such flow exceeds a preset value.

volatile memory: memory lost when operating power is removed.

waiting-passenger indicator: an indicator that shows at which landings and for which direction elevator hall stop-or-signal calls have been registered and are unanswered.

weatherproof: so constructed or protected that exposure to the weather will not interfere with successful operation.

width, moving walk: the exposed width of the treadway.

window: an assembly consisting of a surrounding frame and one or more sashes, ventilators, or fixed lights, or a combination of these, designed to be installed in a wall opening for the purpose of admitting light or air, or both.

working pressure: the pressure measured at the hydraulic machine when lifting car and its rated load at rated speed, or with Class C2 loading when leveling up with maximum static load.

yield strength: the tensile stress that is sufficient to produce a permanent deformation of 0.2%.

SECTION 1.5
ALTERATIONS, MAINTENANCE, AND INSPECTIONS AND TESTS

Existing installations shall conform to the following requirements of ASME A17.1–2004:

(a) requirements 8.10, Acceptance Inspections and Tests; and 8.11, Periodic Inspections and Tests

(b) requirements 8.6, Maintenance, Repair, and Replacement; and 8.7, Alterations

SECTION 1.6
REFERENCE DOCUMENTS

Table 1.6(a) covers the codes and standards incorporated in this Code by reference, the specific editions that are applicable, and the paragraphs in this Code that reference each document. Table 1.6(b) lists the organizations from which these documents can be procured. Only that portion of the code or standard specified by the paragraphs of this Code are applicable.

Copyright © 2009 by the American Society of Mechanical Engineers.
No reproduction may be made of this material without written consent of ASME.

(08)

Table 1.6(a) Reference Documents

Standard	Reference	Available From
American Plywood Design Specification A3.3.1 (April 1978)	3.3.1	APA
ANSI A10.4 (latest edition), *Safety Requirements for Personnel Hoists*	1.1.2	ANSI
ANSI A10.5 (latest edition), *Safety Requirements for Material Hoists*	1.1.2	ANSI
ANSI Z97.1–1984, *Performance Specifications and Methods of Test for Safety Glazing Material Used in Buildings*	9.3.3.2, 10.2.2	ANSI
ANSI/NFPA 101–1991, *Life Safety Code*	2.1.1	NFPA, ANSI
ASA B29.1–1963 [or latest edition, Note (1)], *Precision Power Transmission, Roller Chains, Attachments and Sprockets*	3.8.3, 10.7.11	ASME
ASME A17.1 (latest edition unless otherwise specified), *Safety Code for Elevators and Escalators*	1.1.2, 1.2, 1.4, 1.5, 3.12.8, 7.2.4(a), 7.2.6(c), 7.4.2, Nonmandatory Appendix C	ASME, ANSI
ASME A18.1 (latest edition), *Safety Standard for Platform Lifts and Stairway Chairlifts*	1.1.2	ASME
ASME A90.1 (latest edition), *Safety Standard for Manlifts*	1.1.2	ASME, ANSI
ASME A120.1 (latest edition), *Safety Requirements for Powered Platforms for Building Maintenance*	1.1.2	ASME
ASME B20.1 (latest edition), *Safety Standard for Conveyors and Related Equipment*	1.1.2	ASME, ANSI
ASTM E 84-05$^{\varepsilon 1}$ *Standard Test Method for Surface/Burning Characteristics of Building Materials*	3.3.5	ASTM
CAN/CGSB-12.1-M90, *Tempered or Laminated Safety Glass*	2.6.3	CGSB
CAN/CGSB-12.11-M90, *Wired Safety Glass*	2.6.3	CGSB
CAN/CGSB-12.12-M90, *Plastic Safety Glazing Sheets*	2.6.3	CGSB
IFC, *International Fire Code-2006*	2.1.1(b)	ICC
16 CFR Part 1201-86 *Architectural Glazing Standards and Related Materials*	2.6.3	US. GPO

NOTE:
(1) Latest edition is ASME 29.1M-1993 (R1999).

Copyright © 2009 by the American Society of Mechanical Engineers.
No reproduction may be made of this material without written consent of ASME.

Table 1.6(b) Procurement Information (08)

ANSI	American National Standards Institute, Inc. 25 West 43rd Street New York, New York 10036 Telephone: (212) 642-4900 http://www.ansi.org
APA	American Plywood Association P.O. Box 11700 Tacoma, Washington 98411-0700 Telephone: (253) 565-6600 http://www.apawood.org
ASME	The American Society of Mechanical Engineers Three Park Avenue New York, New York 10016-5990 Telephone: (212) 591-8500 http://www.asme.org ASME Order Department 22 Law Drive P.O. Box 2300 Fairfield, New Jersey 07007-2300 Telephone: (201) 882-1167 (800) 843-2763
ASTM	American Society for Testing and Materials 100 Barr Harbor Drive W. Conshohocken, Pennsylvania 19428-2959 Telephone: (610) 832-9500 http://www.astm.org
CGSB	Canadian General Standards Board Place du Portage III, 681 11 Laurier Street Gatineau, Canada K1A 1G6 Telephone: (819) 956-0425 or 1-800-665-2472 http://www.pwgsc.gc.ca/cgsb
ICC	International Code Council, Publications 4051 West Flossmoor Road Country Club Hills, IL 60478-5771 Telephone: (800) 214-7167 http://www.iccsafe.org
NFPA	National Fire Protection Association 1 Batterymarch Park P.O. Box 9101 Quincy, Massachusetts 02269-9101 Telephone: (617) 770-3000 http://www.nfpa.org
US GPO	U.S. Government Printing Office Superintendent of Documents 732 North Capitol Street, NW Washington, DC 20401 Telephone: (202) 512-0000 or (866) 512-1800 http://www.gpo.gov

Copyright © 2009 by the American Society of Mechanical Engineers.
No reproduction may be made of this material without written consent of ASME.

Part II
Hoistways and Related Construction for Electric Elevators

SCOPE

This Part applies to electric elevators. It applies to other equipment only as referenced in the applicable Part.

SECTION 2.1
HOISTWAYS

2.1.1 Hoistway Construction

(a) Enclosure of Hoistway. Hoistways shall be enclosed throughout their height, except for elevators that do not penetrate the separate fire-resistive areas of the building and freight elevator entrances conforming to the requirements of 2.6.1(b).

Protection shall be provided around elevators adjacent to areas permitting passage of people (e.g., passageways, stairways, and elevator landings) and adjacent to areas permitting storage. This protection shall be permitted to be fixed guards, or sufficient distance from the moving portion of the elevator, or a combination of both, so that no one can come into contact with the elevator.

(08) *(b) Fire Resistance Rating.* The fire resistance rating of the hoistway enclosure shall be not less than that which is required by local ordinance, or where a local ordinance has not been enacted, by ANSI/NFPA No. 101 or IFC.

2.1.2 Windows in Hoistway Enclosures

Every hoistway-window opening ten stories or less above a thoroughfare, and every such window opening three stories or less above a roof of an adjacent building, shall be guarded on the outside by one of the following methods:

(a) by vertical bars at least 0.625 in. (16 mm) in diameter or equivalent, spaced not more than 10 in. (254 mm) apart, permanently and securely fastened in place

(b) by metal-sash windows having solid-section steel muntins of not less than 0.125 in. (3.2 mm) thickness, spaced not more than 8 in. (203 mm) apart

Exterior hoistway windows shall be identified with 4 in. (102 mm) high letters marked "ELEVATOR."

2.1.3 Projections in Hoistway

Hoistway enclosures shall have substantially flush surfaces on the hoistway sides used for loading and unloading, subject to the following:

(a) Landing sills, hoistway doors, door tracks, and hangers shall be permitted to project inside the hoistway enclosure.

(b) Landing sills, except for elevators equipped with vertically sliding biparting counterbalanced doors or with vertically sliding counterweighted doors, which slide down to open, shall be guarded on the underside with guard plates of smooth metal of not less than 0.0598 in. (1.519 mm) in thickness extending not less than the full width of the car entrance and securely fastened in place as follows:

(1) Where a car leveling device is provided and the hoistway edge of the sill is either flush with or projects into the hoistway, the guard shall have a straight vertical face extending below the sill not less than the depth of the leveling zone plus 3 in. (76 mm).

Where the sill projects inward from the hoistway enclosure, the bottom of the guard shall also be beveled at an angle of not less than 60 deg nor more than 75 deg from the horizontal or the guard shall be extended from the hoistway edge of the landing sill to the top of door hanger pocket of the next entrance below.

The guard is not required for freight elevators with sills not projecting inward from the hoistway enclosure.

(2) Where no car-leveling device is provided and the sill projects inward from the general line of the hoistway, the guard shall be either beveled at an angle of not less than 60 deg nor more than 75 deg from the horizontal, or it shall be permitted to have a straight vertical face extending from the hoistway edge of the landing sill to the top of the door hanger pocket of the next entrance below.

2.1.4 Pipes, Air Ducts, and Wiring (08)

2.1.4.1 Pipes. Pipes conveying gases, vapors, or liquids and not used in connection with the operation of the elevator, which if discharged into the hoistway could be hazardous, shall not be permitted in a hoistway except as covered by 2.1.4.1(a) through (e).

(a) Steam and hot water pipes are permitted in hoistways, for the purpose of heating these areas only, subject to the following:

(1) Heating pipes shall convey only low-pressure steam [5 psi (34 kPa) or less] or hot water [212°F (100°C) or less].

(2) All risers and return pipes shall be located outside the hoistway.

(3) Traps and shutoff valves shall be provided in accessible locations outside the hoistway.

Copyright © 2009 by the American Society of Mechanical Engineers.
No reproduction may be made of this material without written consent of ASME.

(b) Pipes for sprinklers only are permitted in hoistways subject to the following:

(1) All risers and returns shall be located outside of the hoistway.

(2) Branch lines in hoistway shall supply sprinklers at not more than one floor level.

(c) Piping for pit and sump pumps is permitted.

(d) Existing pipes that cannot be removed or rerouted shall be securely fastened and covered to separate them from the hoistway, prevent leakage or condensate from entering the hoistway, and prevent interference with the operation of the elevator equipment.

(e) No pipes shall be installed in the hoistway unless they directly pertain to the operation of the elevator.

NOTE: The installation of sprinklers in an existing machine room or hoistway is an alteration. See ASME A17.1, requirements 8.7.2.8 and 8.7.3.8.

2.1.4.2 Air Ducts and Wiring

(a) All air ducts, wiring, raceways, and cables currently in the hoistway shall be securely fastened to prevent interference with the operation of the elevator equipment.

(b) No air ducts, wiring, raceways, and cables shall be installed in the hoistway unless they directly pertain to the operation of the elevator. Power feeders for the elevator are permitted in the hoistway subject to NFPA-70 or CSA C22.1 requirements as applicable.

(c) Only ducts for heating, cooling, ventilating, and venting the hoistway, machine room, or machinery space are permitted.

2.1.5 Counterweight Guards

(a) Unperforated metal guards shall be installed in the pit and/or machine room located underneath the hoistway on all open sides of the counterweight runway, except that

(1) where a compensating chain(s) or rope(s) is attached to the counterweight, the guard shall be permitted to be omitted in the pit on the side facing the elevator car to which these chains or ropes are attached

(2) where pit-mounted buffers are used, the guard shall be permitted to be omitted where the bottom of the counterweight resting on its compressed buffer is 7 ft (2 134 mm) or more above the pit floor or above the machine or control room floor if located underneath the hoistway

(b) Guards shall extend from a point not more than 12 in. (305 mm) above the pit floor to a point not less than 7 ft (2 134 mm) nor more than 8 ft (2 438 mm) above such floor, and shall be fastened to a metal frame properly reinforced and braced to be at least equal in strength and stiffness to 0.0747 in. (1.897 mm) sheet metal.

Where hoistway clearances will not permit the installation of counterweight guards, a loop of chains or equivalent shall be hung from the bottom of the counterweight to the bottom of the car. If conditions prevent the installation of the chain loop, lightweight chains, approximately 24 in. (600 mm) in length, shall be attached to the bottom of the counterweight. These chains shall be spaced at 6 in. (150 mm) intervals to provide a warning to a person in the path of the descending counterweight.

Where the 24 in. (600 mm) chains have been installed in compliance with the 1996 or earlier edition of ASME A17.3, they shall be permitted to be retained without change.

(c) If the counterweight extends into a machine or control room underneath the hoistway, guards shall be provided as required by 2.1.5(b).

SECTION 2.2
MACHINE ROOMS AND MACHINERY SPACES

2.2.1 Enclosures

Elevator machine and control equipment shall be located in a room or space designated as an elevator machine room or space and shall be accessible only to authorized personnel. Other existing machines and equipment essential to the operation and purpose of the building are permitted, but no equipment that is not used in connection with operation of the elevator shall be added to the enclosed area.

2.2.2 Access to Machine Rooms and Machinery Spaces

A permanent means of access to elevator machine rooms and machinery spaces shall be provided for authorized persons. Access doors to machine rooms and machinery spaces shall be kept closed and locked. The only means of access to a machine room shall not be through the hoistway.

The lock shall be of a spring type arranged to permit the door to be opened from the inside without a key.

2.2.3 Lighting

Permanent electric lighting shall be provided in all machine rooms and machinery spaces.

2.2.4 Ventilation

Machine rooms shall be provided with natural or mechanical ventilation to avoid overheating of the electrical equipment and to ensure safe and normal operation of the elevator.

2.2.5 Pipes, Air Ducts, and Wiring (08)

Pipes conveying gases, vapors, or liquids not connected with the operation of the elevator shall be guarded so that any discharge will not affect the operation of the elevator, except as covered by 2.2.5(a) through (c). No pipes, air ducts, wiring, raceways, or cables shall

Copyright © 2009 by the American Society of Mechanical Engineers.
No reproduction may be made of this material without written consent of ASME.

be installed in the machine room or machinery spaces unless they directly pertain to the operation of the elevator.

(a) Steam and hot water pipes are permitted in machine rooms and machinery spaces, for the purpose of heating these areas only, subject to the following:

(1) Heating pipes shall convey only low pressure steam [5 psi (34 kPa) or less] or hot water [212°F (100°C) or less].

(2) All risers and return pipes shall be located outside the machine room and machinery space.

(3) Traps and shutoff valves shall be provided in accessible locations outside the machine room and machinery space.

(b) Only ducts for heating, cooling, ventilating, and venting the hoistway, machine room, or machinery space are permitted.

(c) Pipes for sprinklers only are permitted in machine rooms and machinery spaces subject to the following:

(1) All risers and returns shall be located outside of the machine room or machinery space.

(2) Branch lines in machine rooms and machinery spaces shall supply sprinklers at not more than one floor level.

NOTE: The installation of sprinklers in an existing machine room or hoistway is an alteration. See ASME A17.1–2004, requirements 8.7.2.8 and 8.7.3.8.

2.2.6 Protection From Weather

Elevator machines and control equipment shall be protected from the weather.

SECTION 2.3
PITS

2.3.1 Access to Pits

(a) Means of access for authorized personnel shall be provided to all pits.

(b) Where a separate pit access door is provided, it shall be self-closing and provided with a spring-type lock arranged to permit the door to be opened from inside the pit without a key. Such doors shall be kept locked.

(c) Keys to unlock the pit access door shall be kept on the premises in a location readily accessible to authorized personnel, but not where they are accessible to the general public. The keys shall be permitted to be the same as those used for the machine room access door.

2.3.2 Drains

Drains connected directly to sewers shall not be provided in pits. Sumps, with or without pumps, are permitted.

2.3.3 Stop Switch

A stop switch conforming to the requirements of 3.10.4(e) shall be provided in the pit of every elevator. The switch shall be located adjacent to the normal pit access.

SECTION 2.4
CLEARANCES AND RUNBYS

2.4.1 Horizontal Car Clearances

The clearance between the edge of the car-platform sill and the hoistway enclosure or fascia for the full width of the clear hoistway-door opening shall be not more than 5 in. (127 mm), except as specified in 2.4.1(a) and (b). This clearance shall be maintained to the location of the car sill when the car is resting on its fully compressed buffer.

(a) Where vertically sliding hoistway doors are installed, the clearance shall be not more than 7.5 in. (190 mm).

(b) For heavy-duty elevators or extra-wide door openings, the clearance shall be permitted to be increased where necessary, subject to the approval of the enforcing authority.

2.4.2 Bottom Car Clearances

When the car rests on its fully compressed buffer, no part of the car or any equipment attached thereto shall strike any part of the pit or any part of the equipment located therein.

2.4.3 Bottom Car and Counterweight Runby

In no case shall the bottom runby exceed the following:

(a) for cars, 24 in. (610 mm)

(b) for counterweights, 36 in. (914 mm)

2.4.4 Top Car Clearance

When the car has reached its maximum upward travel, no equipment on top of the car shall strike any part of the overhead structure or the equipment located in the hoistway.

2.4.5 Landing Sill Clearance

The clearance between the car-platform sill and the hoistway edge of any landing sill, or the hoistway side of any vertically sliding counterweighted slide down to open hoistway door, or of any vertically sliding counterbalanced biparting hoistway door, shall be not less than 0.5 in. (13 mm) where side car guides are used, and not less than 0.75 in. (19 mm) where corner car guides are used. The maximum clearance shall be not more than 1.5 in. (38 mm).

SECTION 2.5
PROTECTION OF SPACES BELOW HOISTWAYS

Where the space below the hoistway is not permanently secured against access, the following requirements shall be conformed to:

(a) Counterweights shall be provided with safeties.

Copyright © 2009 by the American Society of Mechanical Engineers.
No reproduction may be made of this material without written consent of ASME.

(b) The cars and counterweights shall be provided with spring or oil buffers.

(c) Car and counterweight buffer supports shall be of sufficient strength to withstand without permanent deformation the impact resulting from buffer engagement of the car plus the rated load or the counterweight with an empty car at the following speeds:

(1) governor tripping speed where the safety is governor operated

(2) 125% of the rated speed where the safety is not governor operated

SECTION 2.6
HOISTWAY ENTRANCES

2.6.1 Doors or Gates Required

(08) (a) *Passenger Elevators.* Hoistway-landing openings for passenger elevators shall be provided with entrances that guard the full width and the height of the openings.

Hand latches, pull bars, door knobs or other hand-operated door fastening devices mounted on swinging type hoistway doors shall not project beyond the line of the hoistway door sill on automatic or continuous pressure operation passenger elevators that can be operated from hall buttons or switches at the landings. Devices such as continuous rings or loop handles that can trap a hand or fingers are prohibited.

(b) *Freight Elevators.* Hoistway-landing openings for freight elevators shall be provided with entrances that guard the full width of the opening, and guard the height to a minimum of 6 ft (1.83 m) above the landing sill. At the top landing a gate 66 in. (1.65 m) high shall be permitted to be used if there is not sufficient clearance for a 6 ft (1.83 m) high gate. When the requirements of 2.1.1 allow non-fire-resistive hoistway enclosures, a gate shall be permitted to be used. The door or gate shall be permitted to have a maximum 1 in. (25 mm) vertical opening between the landing sill and the door or gate. Openings in gates shall reject a ball 2 in. (51 mm) in diameter.

A gate made in two or more sections that overlap and that slides or telescopes shall be permitted to be used, provided that the openings reject a ball 0.375 in. (9.5 mm) in diameter.

(c) Automatic fire doors, the functioning of which is dependent on the action of heat, shall not lock any elevator hoistway door so that it cannot be opened manually from inside the hoistway, nor shall such door lock any exit leading from any elevator hoistway door to the outside of the building.

(d) Handles or other means provided for operation of manually operated doors shall be so located that it is not necessary to reach the back of any panel, jamb, or sash to operate them.

(e) *Combination Horizontally Sliding Doors and Swinging Panel Hoistway Entrances.* Hoistway entrances consisting of a combination of horizontally sliding doors and a stationary swinging panel shall

(1) have the swinging panel permanently secured closed; or

(2) where the swing panel assembly remains in use, the latches or removable fastenings shall be accessible only from the hoistway side of the entrance. The swing panel shall be equipped with electric contacts conforming to the following:

(a) The contacts shall be positively opened by a lever or other device attached to and operated by the swing panel.

(b) The contacts shall be maintained in the open position by the action of gravity or by a restrained compression spring, or by both, or by positive mechanical means.

(c) When the contacts are opened, electric power shall be removed from the driving machine and brake.

(d) Mercury tube switches shall not be used.

2.6.2 Closing of Hoistway Doors

(a) Horizontally sliding doors of automatic-operation elevators shall be provided with door closers arranged to close an open door automatically if the car for any reason leaves the landing zone.

(b) Horizontal swinging single or center-opening doors of automatic-operation elevators shall be self-closing.

(c) Door closers are not required for the swinging portion of combination horizontally sliding and swinging doors.

2.6.3 Hoistway Door Vision Panels (08)

Manually operated or self-closing hoistway doors of the vertically or horizontally sliding type, for elevators with automatic or continuous-pressure operation, shall be provided with a vision panel except at landings of automatic-operation elevators where a hall position indicator is provided. In multisection doors, the vision panel is required in one section only, but shall be permitted to be placed in all sections. All horizontally swinging doors shall be provided with vision panels. Vision panels shall be permitted to be provided for any type of hoistway door irrespective of the type of operation of the elevator. Where provided, they shall conform to the following:

(a) The area of any single vision panel shall be not less than 24 in.^{2} (0.015 m^2), and the total area of one or more vision panels in any hoistway door shall be not more than 85 in.^{2} (0.055 m^2).

(b) Each clear panel opening shall reject a ball 6 in. (152 mm) in diameter.

(c) Muntins used between panel sections shall be of noncombustible material and of substantial construction. If located on the landing side, they shall be flush with the surface of the landing side of the door.

Copyright © 2009 by the American Society of Mechanical Engineers.
No reproduction may be made of this material without written consent of ASME.

(d) Panel openings shall be glazed with either of the following:

(1) clear wire glass not less than 0.25 in. (6.3 mm) thick

(2) other transparent glazing material not less than 0.25 in. (6.3 mm) thick that meets the impact safety standard 16 CFR Part 1201 or in jurisdictions enforcing NBCC, CAN/CGSB-12.1, CAN/CGSB-12.11, or CAN/CGSB-12.12, whichever is applicable.

(e) The center of the panel shall be located not less than 51 in. (1.29 m) nor more than 67 in. (1.71 m) above the landing; except that for vertically sliding biparting counterbalanced doors, it shall be located to conform with the dimensions specified insofar as the door design will permit.

(f) The vision panels in horizontally swinging doors shall be located for convenient vision when opening the door from the car side.

(g) Wire-glass panels in power-operated doors shall be substantially flush with the surface of the landing side of the door.

(h) Vision panel frames shall be secured by means that deter removal by common tools.

(i) Vision panels that do not meet the requirements of 2.6.3(a) through (h) shall be protected by protective grilles made from stainless or galvanized steel, not less than 0.055 in. (1.397 mm) in thickness, in accordance with the following specifications:

(1) Grilles shall be sized to fit within or over the vision panel frame and completely cover the vision panel opening in the hoistway door.

(2) Grilles shall be secured by means that deter removal by common tools.

(3) Grilles shall contain openings that shall not be larger than 3 in. (76 mm) by 0.75 in. (19 mm) or 0.75 in. (19 mm) in diameter. Such openings shall be spaced at 1 in. (25 mm) center to center.

(4) All edges shall be free of burrs and beveled.

(5) Grilles shall be installed on the hoistway side of the door.

2.6.4 Door Hangers

Door hangers for horizontal slide-type entrances shall conform to the following:

(a) Means shall be provided to prevent the hangers from jumping the track.

(b) Stops shall be provided in the entrance assembly to prevent hangers from overrunning the end of the track.

(c) For power-operated doors, they shall be constructed to withstand, without damage or appreciable deflection, an imposed static load equal to four times the weight of each panel as applied successively downward and upward at the vertical centerline of the panel.

2.6.5 Nonshearing Astragals

On a vertically sliding, biparting, counterbalanced hoistway door, a fire-resistive, nonshearing, and noncrushing member of either the meeting or overlapping type shall be provided on the upper panel to close the distance between the rigid door sections when in contact with the stops. Rigid members and latching devices that overlap the meeting edge within the width of the opening are prohibited.

2.6.6 Pull Straps

Manually operated, vertically sliding biparting entrances of elevators that can be operated from the landings shall be provided with pull straps on the inside and outside of the door. Pull straps shall be provided on the car side of doors of elevators that can be operated from the car only. The length of the pull straps shall conform to the following:

(a) The bottom of the strap shall be not more than 79 in. (2 000 mm) above the landing when the panel is in the fully opened position.

(b) The length of the strap shall not be extended by means of ropes or other materials.

2.6.7 Bottom Guides

Bottom guides shall conform to the following:

(a) The bottom of each panel shall be guided by one or more members.

(b) Guide members shall be securely fastened.

(c) The guide members and any reinforcements or guards shall engage the corresponding member by not less than 6 mm (0.25 in.).

SECTION 2.7
HOISTWAY DOOR LOCKING DEVICES, PARKING DEVICES, AND ACCESS

2.7.1 Hoistway Door or Hoistway Gate Locking Devices (ED)

(a) Interlocks Required for Passenger Elevators. Hoistway doors or gates for passenger elevators shall be equipped with hoistway-door interlocks.

(b) Interlocks Required for Freight Elevators. Hoistway doors or gates for freight elevators shall be equipped with hoistway-door interlocks except as covered by 2.7.1(c).

(c) Mechanical Locks and Electric Contacts Permitted for Freight Elevators. Hoistway combination mechanical locks and electric contacts shall be permitted to be used for manually opened vertically sliding counterweighted or vertically sliding biparting counterbalanced doors or gates under the following conditions:

(1) freight elevators with a rise of 15 ft (4.57 m) or less — for any door the sill of which is located not more than 4 ft (1.22 m) below the sill of the top landing door

Copyright © 2009 by the American Society of Mechanical Engineers.
No reproduction may be made of this material without written consent of ASME.

(2) freight elevators with any rise — for any door the sill of which is within 5 ft (1.5 m) of the bottom of the pit

(d) *Location of Locking Devices.* Combination locks and electric contacts or interlocks shall be so located that they are not accessible from the landing side when the hoistway doors or gates are closed.

2.7.2 Closed Position of Hoistway Doors

(a) *Hoistway Doors Provided With Hoistway Door Interlocks.* Hoistway doors shall be considered to be in the closed position under the following conditions:

(1) For horizontally sliding doors, when the elevator is operated only from within the car

(a) the leading edge of the door is within 4 in. (102 mm) of the nearest face of the jamb or when the door panels of center-opening doors are within 4 in. (102 mm) of each other

(b) the doors are power-closed or equipped with door closers

(c) the hoistway door interlock is provided with the means to lock the door on closing when or before the interlock closes, so that the door cannot be opened more than 4 in. (102 mm)

(2) For horizontally sliding, vertically sliding counterweighted, and biparting counterbalanced doors, when the elevator is operated under conditions that do not conform to 2.7.2(a)(1)

(a) the leading edge of horizontally sliding doors is within 0.375 in. (9.5 mm) of the nearest face of the jamb or when the panels of center-opening doors are within 0.375 in. (9.5 mm) of contact with each other; or

(b) the leading edge of vertically sliding counterweighted doors is within 0.375 in. (9.5 mm) of the sill for doors that slide up to open; or

(c) the astragal on the upper panel of vertically sliding biparting counterbalanced doors within 0.75 in. (19 mm) of the lower panel.

(3) For swinging doors on elevators with all types of operation, when the leading door edge is within 0.375 in. (9.5 mm) of the fully closed position.

(4) For center-opening horizontally swinging doors on elevators with all types of operation, when both door panels are equipped with interlocks, when the clear open space between each door panel and its stops does not exceed 0.375 in. (9.5 mm).

(5) For center-opening horizontally swinging doors on elevators with all types of operation, where one panel can be opened only after the other panel furnished with an interlock has been opened, and the door that opens last is provided with a hoistway door electric contact, and this door panel is in a position to be engaged by the overlapping astragal on the other door panel when it closes, when the clear open space between each door panel and its stops does not exceed 0.375 in. (9.5 mm).

(b) *Hoistway Doors Provided With Hoistway Door Combination Mechanical Locks and Electric Contacts, or With Hoistway Door Electric Contacts.* Hoistway doors shall be considered to be in the closed position under the following conditions:

(1) For horizontally side-sliding or swinging doors, when the clear open space between the leading edge of the door and the nearest face of the door jamb does not exceed 2 in. (51 mm), or for horizontally center-opening sliding doors, when the leading edges of the door panels are within 2 in. (51 mm) of contact with each other.

(2) For vertically sliding counterweighted doors, when the clear open space between the leading edges of the door and the landing sill does not exceed 2 in. (51 mm).

(3) For vertically sliding biparting counterbalanced doors, when the astragal on the upper panel is within 2 in. (51 mm) of the lower panel.

(4) For center-opening horizontally swinging doors, when the clear open space between each door panel and its stops does not exceed 2 in. (5 mm), provided that if a hoistway door electric contact is used on the door panel that opens last, this door contact shall not make contact unless this door panel is in a position to be engaged by the overlapping astragal on the other door panel when it closes.

2.7.3 Elevator Parking Device

(a) *Parking Devices Required.* Elevators that are operated from within the car only shall have elevator parking devices installed at every landing that is equipped with an unlocking device. On elevators that are not operated from within the car only, an elevator parking device shall be provided at one landing and shall be permitted to be provided at other landings. This device shall be located at a height not greater than 6 ft 11 in. (2.11 m) above the floor. Parking devices are not required for elevators having hoistway doors that are automatically unlocked when the car is within the landing zone.

(b) *General Design Requirements.* Parking devices shall conform to the following requirements:

(1) They shall be mechanically or electrically operated.

(2) They shall be designed and installed so that friction or sticking or the breaking of any springs used in the device will not permit opening or unlocking a door when the car is outside the landing zone of that floor.

(3) Springs, where used, shall be of the restrained compression type, which will prevent separation of the parts in case the spring breaks.

2.7.4 Access to Hoistway

Hoistway door unlocking devices or hoistway access switches shall be provided on elevators having hoistway doors that are unlocked when closed with car at landing,

Copyright © 2009 by the American Society of Mechanical Engineers.
No reproduction may be made of this material without written consent of ASME.

or locked but openable from the landing by means effective only when the car is in the landing zone. Hoistway door unlocking devices shall be permitted to be provided at all landings for emergency purposes.

(a) Hoistway Door Unlocking Devices. Hoistway door unlocking devices shall conform to the following:

(1) The device shall unlock and permit the opening of the hoistway door from the access landing irrespective of the position of the car.

(2) The device shall be designed to prevent unlocking the door with common tools.

(3) The operating means for unlocking the door shall be available to and used only by inspectors, elevator maintenance and repair personnel, and qualified emergency personnel.

(4) The unlocking-device keyway shall be located at a height not greater than 6 ft 11 in. (2.11 m) above the floor.

(b) Hoistway Access Switches. Hoistway access switches shall conform to the following:

(1) The switch shall be installed only at the access landings.

(2) The switch shall be installed adjacent to hoistway entrance at the access landing with which it is identified.

(3) The switch shall be of the continuous-pressure spring-return type, and shall be operated by a cylinder-type lock having not less than a five-pin or five-disk combination with the key removable only when the switch is in the "OFF" position. The lock shall not be operable by any key that will operate locks or devices used for other purposes in the building. The key or combination shall be available to and used only by inspectors and elevator maintenance and repair personnel.

(4) The operation of the switch at either access landing shall permit, and shall be permitted to initiate and maintain, movement of the car with the hoistway door at this landing unlocked or not in the closed position, and with the car door or gate not in the closed position, subject to the following:

(a) The operation of the switch shall not render ineffective the hoistway door interlock or electric contact at any other landing.

(b) The car cannot be operated at a speed greater than 150 ft/min (0.76 m/s).

(c) For automatic and continuous-pressure operation elevators, provided that

(1) landing operating devices of continuous-pressure operation elevators, and car and landing operating devices of automatic operation elevators, are first made inoperative by means other than the access switch

(2) power operation of the hoistway door and/or car door or gate is inoperative

(d) Automatic operation by a car-leveling device is inoperative.

(e) The top-of-car operating device (see 3.7.1) is inoperative.

(f) The movement of the car initiated and maintained by the upper access switch shall be limited in the down direction to a travel not greater than the height of the car crosshead above the car platform, and limited in the up direction above the upper access landing to the distance the car apron extends below the car platform.

Where electrically operated switches, relays, or contactors are used to render inoperative the hoistway-door interlock or electric contact or the car door or gate electric contact, the control circuits shall be arranged to conform to the requirements of 3.10.9 and in addition, to render the normal car and hall operation ineffective if any such switch, relay, or contactor fails to function in the intended manner.

2.7.5 Restricted Opening of Hoistway Doors and/or Car Doors on Passenger Elevators

(a) When a car is outside the unlocking zone, the hoistway doors or car doors shall be so arranged that the hoistway doors or car doors cannot be opened more than 4 in. (102 mm) from inside the car.

(b) When the car is outside the unlocking zone, the car doors shall be openable from outside the car without the use of special tools.

(c) The unlocking zone shall extend from the landing floor level to a point no greater than 18 in. (457 mm) above or below the landing floor level.

2.7.6 Hoistway Emergency Door Contacts

Hoistway emergency door contacts shall conform to the following:

(a) They shall be positively opened by a lever or other device attached to and operated by the emergency door.

(b) They shall be maintained in the open position by the action of gravity or by a restrained compression spring, or by both, or by positive mechanical means.

Mercury tube switches shall not be used.

SECTION 2.8
POWER OPERATION OF DOORS AND GATES

2.8.1 Kinetic Energy and Force Limitations for Power-Operated Horizontally Sliding Doors

Where a power-operated horizontally sliding hoistway door is closed by momentary pressure or by automatic means, or is closed simultaneously with another door from one continuous pressure means, the closing mechanism shall be designed and installed to conform to the following requirements:

(a) Kinetic Energy. The kinetic energy of the hoistway door and all parts rigidly connected thereto, computed for the average closing speed, shall not exceed 7 ft-lbf

Copyright © 2009 by the American Society of Mechanical Engineers.
No reproduction may be made of this material without written consent of ASME.

(9.49 J) where a reopening device for the power-operated car door or gate conforming to the requirements of 2.8.1 is used and shall not exceed 2.5 ft-lbf (3.39 J) where such door reopening device is not used. Where the hoistway door and the car door or gate are closed in such a manner that stopping either one manually will stop both, the sum of the hoistway and the car door weights as well as all parts rigidly connected thereto shall be used to compute the kinetic energy.

The average closing speed shall be determined by timing the closing door as follows:

(1) With side-opening and multiple speed side-opening doors, determine the time required for the leading edge of the door to travel from a point 2 in. (51 mm) away from the open jamb to a point 2 in. (51 mm) away from the opposite jamb.

(2) With center-opening and multiple-speed center-opening doors, determine the time required for the leading edge of the door to travel from a point 1 in. (25 mm) away from the open jamb to a point 1 in. (25 mm) from the center meeting point of the doors.

(b) Force Limitations. The force necessary to prevent closing of the hoistway door (or the car door or gate if power-operated) from rest shall be not more than 30 lbf (133 N). This force shall be measured on the leading edge of the door with the door at any point between one-third and two-thirds of its travel.

2.8.2 Reopening Device for Power-Operated Car Doors or Gates

Where required by 2.8.1, a power-operated car door or gate shall be provided with a reopening device that will function to stop and reopen the car door or gate and the adjacent hoistway door in the event that the car door or gate is obstructed while closing. If the closing kinetic energy is reduced to 2.5 ft-lbf (3.39 J) or less, the reopening device shall be permitted to be rendered inoperative [see 2.8.1(a)].

For center-opening doors or gates, the reopening device shall be so designed and installed that the obstruction of either door or gate panel when closing will cause the reopening device to function.

Copyright © 2009 by the American Society of Mechanical Engineers.
No reproduction may be made of this material without written consent of ASME.

Part III
Machinery and Equipment for Electric Elevators

SCOPE

This Part applies to electric elevators. It applies to other equipment only as referenced in the applicable Part.

SECTION 3.1
BUFFERS AND BUMPERS

Car and counterweight buffers or bumpers shall be provided. Solid bumpers shall be permitted to be used in lieu of buffers:

(a) where the rated speed is 50 ft/min (0.25 m/s) or less; or

(b) where Type C safeties are used.

SECTION 3.2
COUNTERWEIGHTS

On rod-type counterweights, the rod nuts shall be cotter-pinned and the tie rods shall be protected so that the head weight cannot crush the tie rods on buffer engagement.

The weights shall be protected so that they cannot be dislodged.

SECTION 3.3
CAR FRAMES AND PLATFORMS

3.3.1 Car Platforms

Every elevator car shall have a platform consisting of a nonperforated floor attached to a platform frame supported by the car frame, and extending over the entire area within the car enclosure. Holes in the floor for the safety plank wrench, etc., shall be covered and secured. The platform-frame members and the floor shall be designed to withstand the forces developed under the loading conditions for which the elevator is designed and installed.

Laminated platforms shall be permitted to be used for passenger elevators having a rated load of 5,000 lb (2 270 kg) or less. The deflection of any point of a laminated platform when uniformly loaded to rated capacity shall not exceed $1/960$ of the span. The stresses in the steel facing shall not exceed one-fifth of its ultimate strength and the stresses in the plywood core shall not exceed 60% of the allowable stresses in Section 3.14 of the American Plywood Association Plywood Design Specification. Platform frames are not required where laminated platforms are provided.

3.3.2 Platform Guards (Aprons)

The entrance side of the platform of passenger elevators and freight elevators shall be provided with smooth metal guard plates of not less than 0.0598 in. (1.519 mm) thick steel, or material of equivalent strength and stiffness, adequately reinforced and braced to the car platform and conforming to the following:

(a) It shall be extended not less than the full width of the widest hoistway door opening.

(b) It shall have a straight vertical face, extending below the floor surface of the platform, of not less than the depth of the leveling, landing, or truck zone, plus 3 in. (76 mm). The vertical face shall be a minimum of 21 in. (533 mm), except, where practical limitations do not permit 21 in. (533 mm), the maximum reasonable length shall be provided.

(c) If new guards are installed, the lower portion of the guard shall be bent back at an angle of not less than 60 deg nor more than 75 deg from the horizontal.

(d) The guard plate shall be securely braced and fastened in place to withstand a constant force of not less than 150 lbf (667 N) applied at right angles to and at any position on its face without deflecting more than $1/4$ in. (6.3 mm) and without permanent deformation.

3.3.3 Hinged Platform Sills

Hinged platform sills, where provided, shall be provided with electric contacts that will prevent operation of the elevator by the normal operating device unless the hinged sill is within 2 in. (51 mm) of its fully retracted position.

The elevator shall be permitted to be operated by the leveling device in the leveling zone with the sill in any position.

3.3.4 Floating (Movable) Platforms

Floating (movable) platforms that permit operation of the elevator when the car door or gate is not in the closed position are prohibited.

3.3.5 Protection of Platforms Against Fire

The underside of wood platforms, the exposed surfaces of wood platform stringers, and edges of laminated platforms shall be protected against fire by one of the following methods:

(a) covering with sheet steel of at least 0.0164 in. (0.4166 mm) in thickness or with equally fire-retardant material;

Copyright © 2009 by the American Society of Mechanical Engineers.
No reproduction may be made of this material without written consent of ASME.

(b) painting with an approved fire-retardant paint, having flame spread rating of not over 50, applied in accordance with the instructions of the manufacturer. Such ratings shall be based on the test procedure specified in ANSI/ASTM E 84.

SECTION 3.4
CAR ENCLOSURES

3.4.1 Car Enclosures

Cars shall be fully enclosed on all nonentrance sides and on top.

(a) Passenger Elevators. Car enclosures shall be solid, without perforations. Openings or hinged or removable panels in an enclosure, other than as required for signal, operating, or communication equipment, entrances, vision panels, emergency exits, and ventilation, are prohibited.

(b) Freight Elevators. Car enclosures shall be permitted to be perforated; however, the enclosure in front of and extending 6 in. (152 mm) on each side of the counterweight runway shall be unperforated. These perforations shall reject a 1.5 in. (38 mm) diameter ball.

(c) Car Tops. The car top shall be of sufficient strength to sustain a load of 300 lb (136.2 kg) applied on any square area 2 ft (0.61 m) on a side and 100 lb (45.4 kg) applied at any point. Simultaneous application of these loads is not required.

3.4.2 Car Doors and Gates

(a) Doors, Gates, and Electric Contacts. Cars shall have a car door or gate provided at each entrance equipped with a car door or gate electric contact conforming to following requirements:

(1) It shall be positively opened by a lever or other device attached to and operated by the door or gate.

(2) It shall be maintained in the open position by the action of gravity or by a restrained compression spring, or both, or by positive mechanical means.

(3) It shall not be readily accessible.

(b) Car-Door Interlock. A car-door interlock shall be required for

(1) car doors of elevators where the clearance between the loading side of the car platform and hoistway enclosure exceeds the maximum specified in 2.4.1

(2) car doors of elevators that face an unenclosed portion of the hoistway during the travel of the car

(c) Closed Position of Car Doors or Gates. Car doors or gates shall be considered to be in the closed position under the following conditions:

(1) for horizontally sliding doors or gates, when the clear open space between the leading edge of the door or gate and the nearest face of the jamb does not exceed 2 in. (50 mm) except where car doors are provided with a car-door interlock(s), 0.375 in. (10 mm)

(2) for vertically sliding counterweighted doors or gates, when the clear open space between the leading edge of the door or gate and the car platform sill does not exceed 2 in. (50 mm)

(3) for horizontally sliding center-opening doors, or vertically sliding biparting counterbalanced doors, when the door panels are within 2 in. (50 mm) of contact with each other, except where horizontally sliding center-opening car doors are provided with a car-door interlock(s), 0.375 in. (10 mm)

(d) Collapsible Gates. Collapsible car gates shall conform to the following requirements:

(1) Collapsible car gates shall not be power opened to a distance exceeding one-third of the clear gate opening, and in no case more than 10 in. (254 mm).

(2) When fully closed (extended position), gates shall reject a ball 3 in. (76 mm) in diameter for passenger elevators and 4.5 in. (114 mm) for freight elevators.

(3) Gates shall have at least every fourth vertical member guided at the top and every second vertical member guided at the bottom.

(4) Handles of manually operated collapsible gates nearest the car operating device on elevators operated from the car only shall be so located that the nearest handle is not more than 48 in. (1.22 m) from the car operating device when the gate is closed (extended position), and not more than 48 in. (1.22 m) above the car floor. Gate handles shall be provided with finger guards.

3.4.3 Location of Car Doors and Gates in Relation to Hoistway Door (08)

All elevators, except freight elevators operated from the car only by car switch or constant pressure operation, equipped with horizontally swinging doors, and which are not accessible to the general public and located in factories, warehouses, garages, and similar buildings, shall conform to the following requirements:

(a) Location. Doors or gates for automatic or continuous-pressure operation elevators shall be so located that the distance from the face of the car door or gate or the car door or gate space guard to the face of the hoistway door or hoistway door space guard shall be not more than the following [see 3.4.3(c)]:

(1) where a swinging-type hoistway door and a car gate are used, 4 in. (102 mm)

(2) where a swinging-type hoistway door and a car door are used, 5.5 in. (140 mm)

(3) where a sliding-type hoistway door and a car gate or door are used, 5.5 in. (140 mm)

(b) Space Guards. When space guards are provided, the guard shall be constructed of sheet metal or material of equivalent strength, attached to the hoistway door or the car door or gate or both by tamper resistant means. Guards shall be permitted to be installed on both the car and hoistway entrance. Where hoistway doors or car doors or gates are constructed of wood, space guards

Copyright © 2009 by the American Society of Mechanical Engineers.
No reproduction may be made of this material without written consent of ASME.

constructed of wood or other suitable material shall be permitted. The bottom of the guard shall not be more than 0.5 in. (13 mm) above the sill. The face of the guard shall run vertically not less than 40 in. (1.01 m). If the top of the guard interferes with the vision panel, the height of the guard shall be permitted to be reduced so that the height of the vertical surface is not less than 30 in. (762 mm). Where space guards cover the entire face of the door, (full height space guard) and the hoistway door is equipped with a vision panel, a vision panel conforming to the requirements of 2.6.3 shall be provided in the space guard. Cutouts in full height space guards for hoistway door interlocks shall be limited to that required for operation of the interlocks. The guard shall extend to within 1.5 in. (38 mm) of the edges of the door. The top of the guard shall be inclined toward the face of the door at an angle of not less than 60 deg nor more than 75 deg from the horizontal. The tops of full height guards are not required to be inclined. Exposed edges shall be beveled or rolled to eliminate sharp edges. The guard shall be sufficiently rigid or reinforced to prevent collapsing or denting. Mounting of the guard shall have proper clearances at the bottom and sides to permit easy closing of the door and shall not interfere with the self-closing. On multisection horizontally sliding doors, only the leading or fast panel shall be fitted with the space guard. The sides of the guard shall be closed if the depth exceeds 5 in. (127 mm). (See also Nonmandatory Appendix A.)

Space guards shall not project beyond the edge of the car or hoistway sill.

Where hand latches, door knobs, or pull bars conforming to the requirements of 2.6.1(a) are provided to permit proper closing or latching of the door, a cutout shall be permitted to provide access to this hardware. The top of the cutout shall be inclined at an angle of not less than 60 deg nor more than 75 deg from the horizontal. Openings caused by the cutout shall be closed by unperforated material.

(c) Measurement of Distances. The distances specified shall be measured as follows:

(1) where a multisection car door and multisection hoistway door are used or where one of these doors is multisection and the other is single section, between the sections of the car door or car door space guard and the hoistway door or hoistway door space guard nearest to each other.

(2) where a multisection car door and a swinging-type hoistway door are used, between the hoistway door or hoistway door space guard and the section of the car door farthest from it. Where three-speed car doors are used, the distance shall be measured from the intermediate speed panel.

(3) where a car gate is used, between the car gate and the section of the hoistway door or hoistway door space guard nearest to the car gate.

(d) Sight Guards. On horizontally sliding hoistway doors where existing clearances are greater than specified by 3.4.3(a) and (b), a vertical sight guard shall be mounted to the leading edge of the hoistway door. The sight guard shall be mounted with a vertical clearance of not more than 0.75 in. (19 mm) to the sill, to a height of not less than 6 ft (1.8 m) and shall project from the door, a distance of not more than 0.5 in. (13 mm) nor less than 0.125 in. (3.2 mm) from the hoistway edge of the sill. (See also Nonmandatory Appendix A.)

3.4.4 Emergency Exits

3.4.4.1 Top Emergency Exits (08)

(a) For elevators installed in enclosed hoistways, cars shall be provided with a car top emergency exit with a cover hinged or otherwise attached to the car top so that the cover can be opened from the top of the car only and opens outward.

For multideck elevator cars, the exit cover of the lower compartment shall be openable from either compartment.

(b) For elevators installed in unenclosed hoistways

(1) top emergency exits shall not be installed in cars in an unenclosed hoistway. Existing top emergency exits shall be permanently secured closed.

(2) where an elevator is installed in a single blind hoistway, there shall be installed in the blind portion of the hoistway an emergency door at every third floor, but not more than 36 ft (10.97 m) from sill to sill conforming to the following:

(a) The clear opening shall be at least 28 in. (711 mm) wide and 6 ft 6 in. (1 981 mm) high.

(b) It shall be easily accessible and free from fixed obstructions.

(c) It shall be either of the horizontal sliding or swinging single-section type, irrespective of the type of door installed at other landings.

(d) It shall be self-closing and self-locking and shall be marked, in letters not less than 2 in. (51 mm) high, "DANGER, ELEVATOR HOISTWAY."

(e) It shall be provided with an electric contact conforming to the requirements of 2.7.5.

(f) It shall be unlocked from the landing side only through the use of a cylinder-type lock, having not less than a five-pin or five-disk combination. The cylinder lock shall

(1) not be unlocked by any key or combination that will open any other lock or device used for any purpose in the building

(2) be so designed that the key shall be removable only in the locked position

(g) The key or combination shall be kept where it is available only to authorized persons.

(3) Telephone as Alternative to Emergency Doors. Where an elevator is installed in a single blind hoistway, and there are no landings from which to gain access

Copyright © 2009 by the American Society of Mechanical Engineers.
No reproduction may be made of this material without written consent of ASME.

through an emergency door, a means of two-way conversation conforming to 3.11.1 shall be provided, except that the means to activate the two-way conversation system shall be provided in the car.

NOTE [3.4.4.1(b)(3)]: Examples are pulp mills, grain elevators, dams, or similar locations.

3.4.4.2 Side Emergency Exits. Side emergency exit doors or panels, where provided, shall have a lock arranged so that the door shall be permitted to be opened from the inside of the car only by a special shaped removable key and outside the car by means of a nonremovable handle. All side emergency car exits shall be equipped with electric contacts to prevent the movement of the car if the exit door or panel is not closed. Side emergency exit door panels shall open only into the car.

3.4.5 Car Illumination

(a) Interiors of cars shall be provided with an electric light or lights. Not less than two lamps shall be provided.

(b) The minimum illumination at the car threshold, with the door closed, shall not be less than

(1) for passenger elevators: 5 fc (54 lx)

(2) for freight elevators: 2.5 fc (27 lx)

(c) Light control switches are not required, but if provided they shall be located in or adjacent to the operating device in the car. In elevators having automatic operation, they shall be of the key-operated type or located in a fixture with a locked cover.

(d) Passenger elevators shall be provided with a standby (emergency) lighting power source on each elevator conforming to the following:

(1) The standby system shall provide general illumination in the car. The intensity of illumination 4 ft (1 219 mm) above the car floor and approximately 1 ft (305 mm) in front of the car-operating device shall be not less than 0.2 fc (2.2 lx). Lights shall be automatically turned on in all elevators in service immediately after normal car lighting power fails. The power system shall be capable of maintaining the above light intensity for a period of at least 4 h.

(2) Not less than two lamps of approximately equal wattage shall be used.

(e) Top of car light fixtures shall be permitted to be provided with a non-key-operated switch in or adjacent to the fixture.

3.4.6 Protection of Light Bulbs and Tubes

Light bulbs and tubes shall:

(a) be externally guarded or coated to contain broken glass in case the bulb or tube accidently breaks; and

(b) be so mounted in the structure that the structure and the bulb or tube will withstand the required elevator test without being damaged or becoming dislodged.

SECTION 3.5
SAFETIES

3.5.1 Car Safeties

The car of every elevator suspended by wire ropes shall be provided with a safety capable of stopping and sustaining the car with rated load. When the safety is operated by a governor, the safety shall be capable of stopping and sustaining the car with rated load from governor tripping speed.

3.5.2 Counterweight Safeties

Where required by Section 2.5, counterweight safeties shall be provided and shall be capable of stopping and sustaining the counterweight. When the safety is operated by a governor, the safety shall be capable of stopping and sustaining the counterweight from governor tripping speed.

3.5.3 Safeties to Stop Ascending Cars or Counterweights Prohibited

Safeties shall not stop an ascending car or counterweight.

3.5.4 Application and Release of Safeties

Safeties shall be applied mechanically. Electrical, hydraulic, or pneumatic devices shall not be used to apply the safeties, nor to hold such safeties in the retracted position. Safeties that depend on traction for application are prohibited. When car safeties are applied, no decrease in tension in the governor rope nor motion of the car in the down direction shall release the safeties, but such safeties shall be permitted to be released by the motion of the car in the up direction.

3.5.5 Maximum Permissible Movement of Governor Rope to Operate the Safety Mechanism

For all Type B safeties the movement of the governor rope relative to the car or the counterweight, respectively, required to operate the safety mechanism from its fully retracted position to a position where the safety jaws begin to exert pressure against the guide rails shall not exceed the following values based on rated speed:

(a) For car safeties

(1) 200 ft/min (1.02 m/s) or less, 42 in. (1.07 m)

(2) 201 ft/min (1.03 m/s) to 375 ft/min (1.91 m/s), 36 in. (914 mm)

(3) over 375 ft/min (1.91 m/s), 30 in. (762 mm)

(b) For counterweight safeties, 42 in. (1.07 m) for all speeds.

Drum-operated car and counterweight safeties, requiring continual unwinding of the safety drum rope to fully apply the safety, shall be so designed that not less than three turns of the safety rope will remain on the drum after the overspeed test of the safety has been made with rated load in the car.

Copyright © 2009 by the American Society of Mechanical Engineers.
No reproduction may be made of this material without written consent of ASME.

3.5.6 Rail Lubricants and Lubrication Plate

Rail lubricants or coatings that will reduce the holding power of the safety or prevent its functioning as required shall not be used.

A metal plate shall be securely attached to the car crosshead in an easily visible location and, where lubricants are to be used, shall carry the notation, "CONSULT MANUFACTURER OF THE SAFETY FOR THE CHARACTERISTICS OF THE RAIL LUBRICANT TO BE USED." If lubricants are not to be used, the plate shall so state.

If lubricants other than those recommended by the manufacturer are used, a safety test should be made to demonstrate that the safety will function as required.

3.5.7 Overall Length of Guide Rails

The car and counterweight guide rails shall extend at the top and bottom to prevent the guiding members from disengaging from the guide rails in the event that either the car or counterweight reaches its extreme limit of travel.

SECTION 3.6
SPEED GOVERNORS

3.6.1 Speed Governor Overspeed and Car Safety Mechanism Switches

A switch shall be provided on the speed governor and operated by the overspeed action of the governor when used with Type B and Type C car safeties of elevators having a rated speed exceeding 150 ft/min (0.76 m/s). A switch shall be provided on the speed governor when used with a counterweight safety for any car speed. For static control, an overspeed switch shall be provided regardless of rated speed and shall operate in both directions of travel.

These switches shall, when operated, remove power from the driving-machine motor and brake before or at the time of application of the safety.

Switches used to perform the function specified shall be positively opened and remain open until manually reset. Switches operated by the car safety mechanism shall be of a type that will not reset unless the car safety mechanism has been returned to the off position.

3.6.2 Governor Ropes

Governor ropes shall be of iron, steel, monel metal, phosphor bronze, or stainless steel. They shall be regular-lay construction, and not less than 0.375 in. (9.5 mm) in diameter. Tiller-rope construction shall not be used.

The factor of safety of governor ropes shall be not less than 5.

SECTION 3.7
CAPACITY AND LOADING

3.7.1 Minimum Rated Load for Passenger Elevators

The rated load in pounds (kilograms) for passenger elevators shall be based on the inside net platform areas, and shall not be less than shown in Table 3.7.1.

The inside net platform areas shall be determined as shown in Fig. 3.7.1. Table 3.7.1 shows the maximum inside net platform areas for the various common rated loads. If other rated loads are used, they shall be not less than as follows:

(a) for an elevator having an inside net platform area of not more than 50 ft^2 (4.65 m^2), $W = 0.667A^2 + 66.7A$

(b) for an elevator having an inside net platform area of more than 50 ft^2 (4.65 m^2), $W = 0.0467A^2 + 125A - 1367$

where

A = inside net platform area, ft^2 (m^2)
W = minimum rated load, lb (kg)

3.7.2 Use of Partitions for Reducing Inside Net Platform Area

Where partitions are installed in elevator cars for the purpose of restricting the platform net area for passenger use, they shall be permanently fastened in place. Gates, doors, or handrails shall not be used for this purpose. Partitions shall be so installed as to provide for approximately symmetrical loading.

When conditions do not permit symmetrical loading, guide rails, car frame, and platforms shall be capable of sustaining the resulting stresses and deflections.

3.7.3 Minimum Rated Load for Freight Elevators

(a) Minimum Load Permitted. The minimum rated load for freight elevators in pounds (kilograms) shall be based on the weight and class of the load to be handled, but shall in no case be less than the minimum specified in 3.7.3(b) for each class of loading based on the inside net platform area.

(b) Classes of Loading and Design Requirements. Freight elevators shall be designed for one of the following classes of loading:

(1) Class A — General Freight Loading. Where the load is distributed, the weight of any single piece of freight or of any single hand truck and its load is not more than one-quarter the rated load of the elevator, and the load is handled on and off the car platform manually or by means of hand trucks.

For this class of loading, the rated load shall be based on not less than 50 lb/ft^2 (244 kg/m^2) of inside net platform area.

(2) Class B — Motor Vehicle Loading. Where the elevator is used solely to carry automobile trucks or passenger automobiles up to the rated load of the elevator.

Copyright © 2009 by the American Society of Mechanical Engineers.
No reproduction may be made of this material without written consent of ASME.

Table 3.7.1 Maximum Inside Net Platform Areas for the Various Rated Loads

Rated Load, lb	Inside Net Platform Area, ft^2	Rated load, lb	Inside Net Platform Area, ft^2
500	7.0	5,000	50.0
600	8.3	6,000	57.7
700	9.6	7,000	65.3
1,000	13.25	8,000	72.9
1,200	15.6	9,000	80.5
1,500	18.9	10,000	88.0
1,800	22.1	12,000	103.0
2,000	24.2	15,000	125.1
2,500	29.1	18,000	146.9
3,000	33.7	20,000	161.2
3,500	38.0	25,000	196.5
4,000	42.2	30,000	231.0
4,500	46.2		

GENERAL NOTES:

(a) To allow for variations in cab designs, an increase in the maximum inside net platform area not exceeding 5%, shall be permitted for the various rated loads.

(b) 1 lb = 0.454 kg; 1 ft^2 = 9.29 E −02 m^2

Fig. 3.7.1 Inside Net Platform Areas for Passenger Elevators

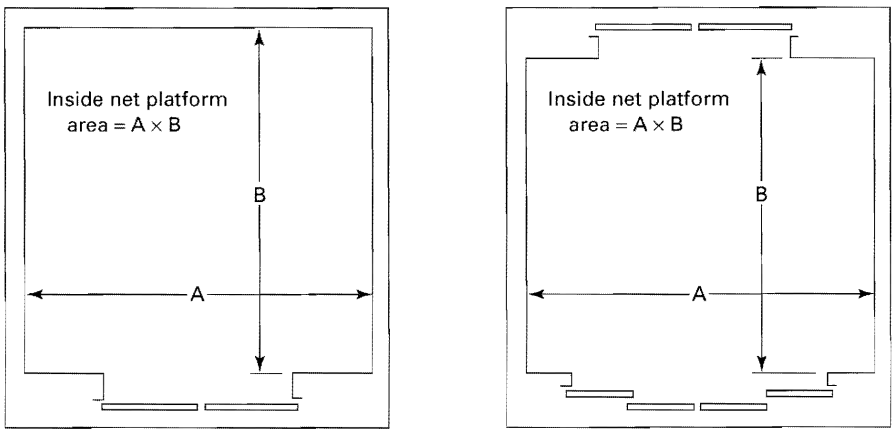

Copyright © 2009 by the American Society of Mechanical Engineers.
No reproduction may be made of this material without written consent of ASME.

For this class of loading, the rated load shall be based on not less than 30 lb/ft^2 (146 kg/m^2) of inside net platform area.

(3) Class C — Industrial Truck Loading. Where the load is carried in transit or is handled on and off the car platform by means of power industrial trucks or by hand trucks having a loaded weight more than one-quarter the rated load of the elevator.

For this class of loading the following requirements shall apply:

(a) The rated load shall be based on not less than 50 lb/ft^2 (244 kg/m^2) of inside net platform area.

(b) The weight of the loaded industrial truck shall not exceed the rated load of the elevator.

(c) The weight of the industrial truck plus any other material carried on the elevator shall not exceed the rated load when the industrial truck is also carried.

(d) During loading and unloading, the load on the elevator shall in no case exceed 150% of the rated load, and where this load exceeds the rated load, the capacity of the brake and the traction relation shall be adequate to safely sustain and level at least 150% of the rated load.

NOTE [3.7.3(b)(3)]: When the entire rated load is placed on the elevator by the industrial truck in increments, the load imposed on the car platform while the last increment is being loaded or the first increment unloaded will exceed the rated load by the weight of the empty industrial truck.

3.7.4 Capacity Plates

(a) Every elevator shall be provided with a capacity plate permanently and securely fastened in place and located in a conspicuous position inside the car. It shall indicate the rated load of the elevator in pounds, and for freight elevators, this plate or a separate plate shall indicate:

(1) the capacity for lifting one-piece loads;

(2) for freight elevators used for industrial truck loading where the truck is not usually carried by the elevator but used only for loading and unloading, the maximum load the elevator is designed to support while being loaded or unloaded.

(b) Capacity plates shall be durable and readily legible. The height of the letters and figures shall be not less than:

(1) 0.25 in. (6.3 mm) for passenger elevator capacity plates

(2) 1 in. (25 mm) for freight elevator capacity plates

3.7.5 Signs on Freight Elevators

In addition to the capacity plates required by 3.7.4, signs shall be provided in elevators not permitted to carry passengers which read: "THIS IS NOT A PASSENGER ELEVATOR, NO PERSONS OTHER THAN THE OPERATOR AND FREIGHT HANDLERS ARE PERMITTED TO RIDE ON THIS ELEVATOR."

The sign shall be located in a conspicuous position and permanently and securely fastened to the car enclosure.

The signs shall be durable and readily legible with 0.5 in. (13 mm) high letters.

SECTION 3.8
DRIVING MACHINES AND SHEAVES

3.8.1 General Requirements

(a) Sheaves and drums shall be of cast iron or steel and shall have finished grooves for ropes.

(b) Set screw fastenings shall not be used in lieu of keys or pins on connections subject to torque or tension.

(c) Friction gearing or a clutch mechanism shall not be used to connect a driving-machine drum or sheave to the main driving mechanism, other than in connection with a car leveling device.

3.8.2 Winding Drum Machines

(a) Winding drum machines shall be provided with a slack-rope device having an enclosed switch of the manually reset type which shall cause the electric power to be removed from the elevator driving machine motor and brake if the hoisting ropes become slack or broken.

(b) Winding drum machines shall be equipped with adjustable machine automatic terminal stop mechanisms set to directly open the main line circuit to the driving machine motor and brake coincident with the opening of the final terminal stopping switch. Chain, belt, or rope-driven mechanisms shall not be used.

3.8.3 Indirect-Drive Machines

(a) Indirect-drive machines, utilizing vee belts, tooth drive belts, or chain drives, shall include not less than three belts or chains operating together in parallel as a set. Belt and chain drive sets shall be preloaded and matched for length in sets.

(b) Belt sets shall be selected on the basis of the manufacturer's rated breaking strength and a safety factor of 10. Chain and sprocket sets shall be selected on the basis of recommendations set forth in the Supplementary Information section of ASA B29.1, using a service factor of 2. Offset links in a chain are not permitted. Chain drives and belt drives shall be guarded to protect against accidental contact and to prevent foreign objects from interfering with drives.

Sprockets in a chain driver set and also in a driven set shall be assembled into a common hub, with teeth cut in line after assembly to assure equal load distribution on all chains. Tooth sheaves for a belt drive shall be constructed in a manner to assure equal load distribution on each belt in the set.

Load determination for both the belt and chain sets shall be based on the maximum static loading on the elevator car (full load on the car and the car at rest at a position in the hoistway that creates the greatest load,

Copyright © 2009 by the American Society of Mechanical Engineers.
No reproduction may be made of this material without written consent of ASME.

including either the car or counterweight resting on its buffer).

(c) Each belt or chain in a set shall be continuously monitored by a broken belt or chain device of the manually reset type which shall function to automatically interrupt power to the machine and apply the brake in the event any belt or chain in the set breaks or becomes excessively slack. The driving machine brake shall be located on the traction sheave or winding drum assembly side of the driving machine so as to be fully effective in the event the entire belt set or chain set should break.

(d) If one belt or chain of a set is worn, stretched, or damaged so as to require replacement, the entire set shall be replaced. Sprockets and toothed sheaves shall also be inspected on such occasions and be replaced if noticeably worn.

3.8.4 Brakes

The elevator driving machine shall be equipped with a friction brake applied by a spring or springs, or by gravity, and released electrically.

The brake shall be designed to have a capacity sufficient to hold the car at rest with its rated load. For passenger elevators and freight elevators permitted to carry employees, the brake shall be designed to hold the car at rest with an additional load up to 25% in excess of the rated load. [See also 3.7.3(b)(3)(d).]

SECTION 3.9
TERMINAL STOPPING DEVICES

3.9.1 Normal Terminal Stopping Devices

Enclosed upper and lower normal terminal stopping devices shall be provided and arranged to slow down and stop the car automatically, at or near the top and bottom terminal landings. Such devices shall function independently of the operation of the normal stopping means and of the final terminal stopping device.

(a) Location. Normal stopping devices shall be located on the car, in the hoistway, or in the machine room, and shall be operated by the movement of the car.

(b) Broken Rope, Tape, and Chain Switches. Broken rope, tape, or chain switches shall be provided in connection with normal terminal stopping devices located in the machine room of traction elevators. Such switches shall be opened by a failure of the rope, tape, or chain and shall cause the electrical power to be removed from the driving machine motor and brake.

3.9.2 Final Terminal Stopping Devices

Enclosed upper and lower final terminal electromechanical stopping devices shall be provided and arranged to prevent movement of the car by the normal operating devices in either direction of travel after the car has passed a terminal landing. Final terminal stopping devices shall be located as follows:

(a) Winding Drum Driving Machines. Elevators having winding drum machines shall have stopping switches on the machines and also in the hoistway operated by the movement of the car.

(b) Traction Driving Machines. Elevators having traction driving machines shall have stopping switches in the hoistway operated by the movement of the car.

SECTION 3.10
OPERATING DEVICES AND CONTROL EQUIPMENT

3.10.1 Types of Operating Devices (08)

Manually actuated rope (i.e., shipper rope) or rod operating devices, or rope operating devices actuated by wheels, levers, or cranks shall not be used.

3.10.2 Car-Switch Operation Elevators

Handles of lever-type operating devices of car-switch operation elevators shall be so arranged that they will return to the stop position and latch there automatically when the hand of the operator is removed.

3.10.3 Top-of-Car Operating Devices

(a) Elevators with automatic or continuous-pressure operation shall have a continuous-pressure button operating switch mounted on the top of the car for the purpose of operating the car solely from the top of the car. The device shall operate the car at a speed not exceeding 150 ft/min (0.76 m/s).

(b) The means for transferring the control of the elevator to the top-of-car operating device shall be on the car top and located between the car crosshead and the side of the car nearest the hoistway entrance normally used for access to the car top.

3.10.4 Electrical Protective Devices

Electrical protective devices shall be provided in accordance with the following:

(a) Slack-Rope Switch. Winding drum machines shall be provided with a slack-rope device equipped with a slack-rope switch of the enclosed manually reset type that shall cause the electric power to be removed from the elevator driving machine motor and brake if the suspension ropes become slack.

(b) Motor-Generator Running Switch. Where generator-field control is used, means shall be provided to prevent the application of power to the elevator driving machine motor and brake unless the motor generator set connections are properly switched for the running condition of the elevator. It is not required that the electrical connections between the elevator driving machine motor and the generator be opened in order to remove power from the elevator motor.

Copyright © 2009 by the American Society of Mechanical Engineers.
No reproduction may be made of this material without written consent of ASME.

(c) Compensating Rope Sheave Switch. Compensating rope sheaves shall be provided with a compensating rope sheave switch or switches mechanically opened by the compensating rope sheave before the sheave reaches its upper or lower limit of travel to cause the electric power to be removed from the elevator driving machine motor and brake.

(d) Broken Rope, Tape, or Chain Switches Used in Connection With Machine Room Normal Terminal Stopping Switches. Broken rope, tape, or chain switches conforming to the requirements of 3.6.1 shall be provided in connection with normal terminal stopping devices located in machine rooms of traction elevators. Such switches shall be opened by a failure of the rope, tape, or chain.

(e) Stop Switch on Top of Car. A stop switch shall be provided on the top of every elevator car, which shall cause the electric power to be removed from the elevator driving machine motor and brake; and

(1) be of the manually operated and closed type

(2) have red operating handles or buttons

(3) be conspicuously and permanently marked "STOP" and shall indicate the stop and run positions

(4) be positively opened mechanically (opening shall not be solely dependent on springs)

(f) Car-Safety Mechanism Switch. A switch shall be required where a car safety is provided.

(g) Speed Governor Overspeed Switch. A speed governor overspeed switch shall be provided when required by 3.6.1.

(h) Final Terminal Stopping Devices. Final terminal stopping devices shall be provided for every elevator.

(i) Emergency Terminal Speed Limiting Device. Where reduced stroke oil buffers are provided, emergency terminal speed limiting devices are required.

(j) Motor Generator Overspeed Protection. Means shall be provided to cause the electric power to be removed automatically from the elevator driving machine motor and brake should a motor generator set, driven by a direct current motor, overspeed excessively.

(k) Motor Field Sensing Means. Where direct current is supplied to an armature and shunt field of an elevator driving machine motor, a motor field current sensing means shall be provided, which shall cause the electric power to be removed from the motor armature and brake unless current is flowing in the shunt field of the motor.

A motor field current sensing means is not required for static control elevators provided with a device to detect an overspeed condition prior to, and independent of, the operation of the governor overspeed switch. This device shall cause power to be removed from the elevator driving machine motor armature and machine brake.

(m) Buffer Switches for Oil Buffers Used With Type C Car Safeties. Oil level and compression switches shall be provided for all oil buffers used with Type C safeties.

(n) Hoistway Door Interlocks or Hoistway Door Electric Contacts. Hoistway door interlocks or hoistway door electric contacts shall be provided for all elevators.

(p) Car Door or Gate Electric Contacts. Car door or gate electric contacts shall be provided for all elevators.

(q) Normal Terminal Stopping Devices. Normal terminal stopping devices shall be provided for every elevator.

(r) Car Side Emergency Exit Electric Contact. An electric contact shall be provided on every car side emergency exit door.

(s) Electric Contacts for Hinged Car Platform Sills. Hinged car platform sills, where provided, shall be equipped with electric contacts.

(t) In-Car Stop Switch. On passenger elevators equipped with nonperforated enclosures, a stop switch, either key operated or behind a locked cover, shall be permitted to be provided in the car and located in or adjacent to the car operating panel. The switch shall be clearly and permanently marked "STOP" and shall indicate the stop and run positions. The switch shall be positively opened mechanically and its opening shall not be solely dependent on springs. When opened, this switch shall cause the electric power to be removed from the elevator driving-machine motor and brake.

(u) Emergency Stop Switch. On all freight elevators, passenger elevators with perforated enclosures, and passenger elevators with nonperforated enclosures not provided with an in-car stop switch [see 3.10.4(t)], an emergency stop switch shall be provided in the car, and located in or adjacent to each car operating panel. When open ("STOP" position), this switch shall cause the electric power to be removed from the elevator driving-machine motor and brake and shall conform to the following: **(08)**

(1) be of the manually operated and closed type

(2) have red operating handles or buttons

(3) be conspicuously and permanently marked "STOP" and shall indicate the stop and run positions

(4) have contacts that are positively opened mechanically (opening shall not be solely dependent on springs).

(v) Stop Switch in Pit. A stop switch, conforming to the requirements of 3.10.4(e) shall be provided in the pit of every elevator. The switch shall be located adjacent to the normal pit access.

(w) Buffer Switches for Gas Spring Return Oil Buffers. A buffer switch shall be provided for gas spring return oil buffers that will cause electric power to be removed from the elevator driving machine motor and brake if the plunger is not within 0.5 in. (13 mm) of the fully extended position.

3.10.5 Power Supply Line Disconnecting Means

(a) A disconnect switch or a circuit breaker shall be installed and connected into the power supply line to

Copyright © 2009 by the American Society of Mechanical Engineers.
No reproduction may be made of this material without written consent of ASME.

each elevator motor or motor generator set and controller. The power supply line shall be provided with overcurrent protection, preferably inside the machine room.

(b) The disconnect switch or circuit breaker shall be of the manually closed multipole type, and be visible from the elevator driving machine or motor generator set. When the disconnecting means is not within sight of the driving machine, the control panel, or the motor generator set, an additional manually operated switch shall be installed adjacent to the remote equipment and connected in the control circuit to prevent starting.

(c) No provision shall be made to close the disconnect switch from any other part of the building.

(d) Where there is more than one driving machine in a machine room, disconnect switches or circuit breakers shall be numbered to correspond to the number of the driving machine that they control.

3.10.6 Phase Reversal and Failure Protection

Elevators having polyphase alternating current power supply shall be provided with means to prevent the starting of the elevator motor if the phase rotation is in the wrong direction, or if there is a failure of any phase.

This protection shall be considered to be provided in the case of generator field control having alternating current motor-generator driving motors, provided a reversal of phase will not cause the elevator driving machine motor to operate in the wrong direction. Controllers on which switches are operated by polyphase torque motors provide inherent protection against phase reversal or failure.

(08) 3.10.7 Operating of the Driving Machine With a Hoistway Door Unlocked or a Hoistway Door or a Car Door Not in the Closed Position

Operating of the driving machine with a hoistway door unlocked or a hoistway door or a car door not in the closed position shall be permitted under either of the following conditions:

(a) by a car-leveling or truck-zoning device

(b) when a hoistway access switch is operated

(c) when the top-of-car or in-car inspection operation utilizing a car door bypass or hoistway door bypass switch is activated

Devices other than those specified above shall not be provided to render hoistway door interlocks, the electric contacts of hoistway door combination mechanical locks and electric contacts, or car door, gate electric contacts, or car-door or gate interlock inoperative. Existing devices that do not conform to the above shall be removed.

3.10.8 Release and Application of Driving Machine Brakes

Driving machine brakes shall not be electrically released until power has been applied to the driving machine motor.

Two devices shall be provided to remove power independently from the brake. If the brake circuit is ungrounded, all power lines to the brake shall be opened. The brake shall apply automatically when:

(a) the operating device of a car switch or continuous pressure operation elevator is in the stop position;

(b) a floor stop device functions;

(c) any of the electrical protective devices in 3.10.4 functions.

Under conditions described in 3.10.8(a) or (b), the application of the brake shall be permitted to occur on or before the completion of the slowdown and leveling operations.

The brake shall not be permanently connected across the armature or field of a direct current elevator driving machine motor.

3.10.9 Control and Operating Circuit Requirements

The failure of any single magnetically operated switch, contactor, or relay to release in the intended manner, or the occurrence of a single accidental ground, or combination of accidental grounds, shall not permit the car to start or run if any hoistway door interlock is unlocked or if any hoistway door or car door or gate electric contact is not in the closed position.

3.10.10 Absorption of Regenerated Power

When a power source is used which, in itself, is incapable of absorbing the energy generated by an overhauling load, means for absorbing sufficient energy to prevent the elevator from attaining governor tripping speed or a speed in excess of 125% of rated speed, whichever is lesser, shall be provided on the load side of each elevator power supply line disconnecting means.

SECTION 3.11
EMERGENCY OPERATION AND SIGNALING DEVICES

3.11.1 Car Emergency Signaling Devices

Elevators shall be provided with the following signaling devices:

(a) In all buildings, where communication and signaling devices do not comply with the requirements of ASME A17.1a-2002 or later editions, elevators shall be provided with the following: (08)

(1) an audible signaling device, operable from the emergency stop switch, when provided, and from a switch marked "ALARM" that is located in or adjacent to each car operating panel. The signaling device shall be located inside the building and audible inside the car and outside the hoistway. One signaling device shall be permitted to be used for a group of elevators.

(2) means of two-way conversation between the car and a readily accessible point outside the hoistway that is available to emergency personnel (telephone, intercom, etc.). The means to activate the two-way conversation system does not have to be provided in the car.

Copyright © 2009 by the American Society of Mechanical Engineers.
No reproduction may be made of this material without written consent of ASME.

(3) if the audible signaling device, or the means of two-way conversation, or both, are normally connected to the building power supply, they shall automatically transfer to a source of emergency power within 10 s after the normal power supply fails. The power source shall be capable of providing for the operation of the audible signaling device for at least 1 h, and the means of two-way conversation for at least 4 h.

(b) In buildings in which a building attendant (building employee, watchman, etc.) is not continuously available to take action when the required emergency signal is operated, the elevators shall be provided with a means within the car for communicating with or signaling to a service which is capable of taking appropriate action when a building attendant is not available.

An emergency power system shall be provided conforming to the requirements of 3.11.1(a)(3).

3.11.2 Operations of Elevators Under Standby (Emergency) Power

An elevator shall be permitted to be powered by a standby (emergency) power system, provided that, when operating on such standby power, there is conformance to the requirements of 3.10.10.

3.11.3 Firefighters' Service

Elevators shall conform to the requirements of ASME/ANSI A17.1–1987 Rules 211.3 through 211.8 (see Nonmandatory Appendix C) unless at the time of installation or alteration it was required to comply with a later edition of A17.1.

All elevators that are a part of a group shall conform to identical firefighters' service operation requirements regardless of which edition of A17.1 they complied with at the time of their installation or alteration.

The Phase I and Phase II switches for all elevators in a building shall be operable by the same key.

SECTION 3.12
SUSPENSION MEANS AND THEIR CONNECTIONS

3.12.1 Suspension Means

Cars shall be suspended by steel wire ropes attached to the car frame or passing around sheaves attached to the car frame. Only iron (low-carbon steel) or steel wire ropes, having the commercial classification "Elevator Wire Rope," or wire rope specifically constructed for elevator use shall be used for the suspension of elevator cars and for the suspension of counterweights. The wire material for ropes shall be manufactured by the open-hearth or electric furnace process or their equivalent.

3.12.2 Rope Data Tag

At each rope renewal a new metal data tag shall be securely attached to one of the wire rope fastenings. This data tag shall bear the following wire rope data:

(a) the diameter in inches

(b) the manufacturer's rated breaking strength

(c) the grade of material used

(d) the month and year the ropes were installed

(e) whether nonpreformed or preformed

(f) construction classification

(g) name of the person or firm who installed ropes

(h) name of the manufacturer of the rope

(i) the number of ropes

(j) the date on which the rope was resocketed or other types of fastening changed

Rope data tags shall be durable and readily legible. The height of letters and figures shall be not less than 0.0625 in. (1.6 mm).

3.12.3 Factor of Safety

The factor of safety of the suspension wire ropes shall be not less than shown in Table 3.12.3. The factor of safety shall be based on the actual rope speed corresponding to the rated speed of the car. The factor of safety shall be calculated by the following formula:

$$f = \frac{S \times N}{W}$$

where

N = number of runs of rope under load. (For 2:1 roping, twice the number of ropes used. For 3:1 roping, three times, etc.)

S = manufacturer's rated breaking strength of one rope

W = maximum static load imposed on all car ropes with the car and its rated load at any position in the hoistway

3.12.4 Minimum Number and Diameter of Suspension Ropes

All elevators, except freight elevators that do not carry passengers or freight handlers and have no means of operation in the car, shall conform to the following requirements:

(a) The minimum number of hoisting ropes used shall be three for traction elevators and two for drum-type elevators. Where a car counterweight is used, the number of counterweight ropes used shall be not less than two.

(b) The minimum diameter of hoisting and counterweight ropes shall be 0.375 in. (9.5 mm). Outer wires of the ropes shall be not less than 0.024 in. (0.61 mm) in diameter. The term "diameter" where used in this Section shall refer to the nominal diameter as given by the rope manufacturer.

3.12.5 Suspension Rope Equalizers

Suspension rope equalizers, where provided, shall be of the individual-compression spring type.

Equalizers of other type shall be permitted to be used with traction elevators, provided that the equalizers and

Copyright © 2009 by the American Society of Mechanical Engineers.
No reproduction may be made of this material without written consent of ASME.

Table 3.12.3 Minimum Factors of Safety for Suspension Wire Ropes

Rope Speed, ft/min	Minimum Factor of Safety		Rope Speed, ft/min	Minimum Factor of Safety	
	Passenger	Freight		Passenger	Freight
50	7.60	6.65	650	10.85	9.65
75	7.75	6.85	700	11.00	9.80
100	7.95	7.00	750	11.15	9.90
125	8.10	7.15	800	11.25	10.00
150	8.25	7.30	850	11.35	10.10
175	8.40	7.45	900	11.45	10.15
200	8.60	7.65	950	11.50	10.20
225	8.75	7.75	1,000	11.55	10.30
250	8.90	7.90	1,050	11.65	10.35
300	9.20	8.20	1,100	11.70	10.40
350	9.50	8.45	1,150	11.75	10.45
400	9.75	8.70	1,200	11.80	10.50
450	10.00	8.90	1,250	11.80	10.50
500	10.25	9.15	1,300	11.85	10.55
550	10.45	9.30	1,350	11.85	10.55
600	10.70	9.50	1,400–2,000	11.90	10.55

GENERAL NOTE: 1 ft/min = 5.08 E −03 m/s

their fastenings are approved by the authority having jurisdiction on the basis of adequate tensile and fatigue tests made by a qualified laboratory. Such tests shall show the ultimate strength of the equalizer and its fastenings in its several parts and assembly, which shall be not less than 10% in excess of the strength of suspension ropes, provided that equalizers of the single-bar type, or springs in tension, shall not be used to attach suspension ropes to cars or counterweights or to dead-end hitch plates.

3.12.6 Securing of Suspension Wire Ropes to Winding Drums

Suspension wire ropes of winding drum machines shall have the drum ends of the ropes secured on the inside of the drum by clamps or by tapered babbitted sockets, or by other means approved by the authority having jurisdiction.

3.12.7 Spare Rope Turns on Winding Drums

Suspension wire ropes of winding drum machines shall have not less than one turn of the rope on the drum when the car is resting on the fully compressed buffers.

3.12.8 Suspension Rope Fastenings

Spliced eyes by return loop shall be permitted to continue in service. Suspension rope fastenings shall conform to requirement 2.20.9 of ASME A17.1–2004, when the ropes are replaced.

3.12.9 Auxiliary Rope Fastening Devices

Auxiliary rope fastening devices, designed to support elevator cars or counterweights if any regular rope fastening fails, shall be permitted to be provided subject to approval by the authority having jurisdiction.

Copyright © 2009 by the American Society of Mechanical Engineers.
No reproduction may be made of this material without written consent of ASME.

Part IV
Hydraulic Elevators

SCOPE

This Part applies to direct plunger and roped-hydraulic elevators.

SECTION 4.1
HOISTWAY, HOISTWAY ENCLOSURES, AND RELATED CONSTRUCTION

Hoistways, hoistway enclosures, and related construction shall conform to the requirements of Part II.

SECTION 4.2
MECHANICAL EQUIPMENT

4.2.1 Buffers and Bumpers

Car buffers or bumpers shall be provided. Solid bumpers shall be permitted to be used in lieu of buffers where the rated speed is 50 ft/min (0.25 m/s) or less.

4.2.2 Car Frames and Platforms

Car frames and platforms shall conform to the requirements of Section 3.3.

4.2.3 Car Enclosures

Car enclosures shall conform to the requirements of Section 3.4.

4.2.4 Capacity and Loading

Capacity and loading shall conform to the requirements of Section 3.7.

SECTION 4.3
DRIVING MACHINES

4.3.1 Connection to Driving Machine

The driving member of a direct plunger driving machine shall be attached to the car frame or car platform with fastenings of sufficient strength to support that member.

The connection to the driving machine shall be capable of withstanding, without damage, any forces resulting from a plunger stop.

NOTE: See Section 4.9 for roped-hydraulic elevators.

4.3.2 Plunger Stops

Plungers shall be provided with solid metal stops and/or other means to prevent the plunger from traveling beyond the limits of the cylinder. Stops shall be so designed and constructed as to stop the plunger from maximum speed in the up direction under full pressure without damage to the connection to the driving machine, plunger, plunger connection, couplings, plunger joints, cylinder, cylinder connecting couplings or any other parts of the hydraulic system. For rated speeds exceeding 100 ft/min (0.51 m/s) where a solid metal stop is provided, means other than the normal terminal stopping device (i.e., emergency terminal speed limiting device) shall be provided to retard the car to 100 ft/min (0.51 m/s) with a retardation not greater than gravity, before striking the stop.

4.3.3 Hydraulic Elevators

Hydraulic elevators that have any portion of the cylinder buried in the ground and that do not have a double cylinder or a cylinder with a safety bulkhead shall:

(a) have the cylinder replaced with a double cylinder or a cylinder with a safety bulkhead protected from corrosion by one or more of the following methods:

(1) monitored cathodic protection;

(2) a coating to protect the cylinder from corrosion that will withstand the installation process;

(3) by a protective plastic casing immune to galvanic or electrolytic action, salt water, and other known underground conditions; or

(b) be provided with a device meeting the requirements of Section 3.5 or a device arranged to operate in the down direction at an overspeed not exceeding 125% of rated speed. The device shall mechanically act to limit the maximum car speed to the buffer striking speed, or stop the elevator car with rated load with a deceleration not to exceed 32.2 ft/s^2 (9.8 m/s^2), and shall not automatically reset. Actuation of the device shall cause power to be removed from the pump motor and control valves until manually reset; or

(c) have other means acceptable to the authority having jurisdiction to protect against unintended movement of the car as a result of uncontrolled fluid loss.

SECTION 4.4
VALVES, SUPPLY PIPING, AND FITTINGS

4.4.1 Pump Relief Valve

(a) Pump Relief Valve Required. Each pump or group of pumps shall be equipped with a relief valve conform-

Copyright © 2009 by the American Society of Mechanical Engineers.
No reproduction may be made of this material without written consent of ASME.

ing to the following requirements, except as covered by 4.4.1(b):

(1) Type and Location. The relief valve shall be located between the pump and the check valve and shall be of such a type and so installed in the bypass connection that the valve cannot be shut off from the hydraulic system.

(2) Size. The size of the relief valve and bypass shall be sufficient to pass the maximum rated capacity of the pump without raising the pressure more than 50% above the working pressure. Two or more relief valves shall be permitted to be used to obtain the required capacity.

(3) Sealing. Relief valves having exposed pressure adjustments, if used, shall have their means of adjustment sealed after being set to the correct pressure.

(b) Pump Relief Valve Not Required. No relief valve is required for centrifugal pumps driven by induction motors, provided the shutoff, or maximum pressure which the pump can develop, is not greater than 135% of the working pressure at the pump.

4.4.2 Check Valve

A check valve shall be provided and shall be so installed that it will hold the elevator car with rated load at any point when the pump stops or the maintained pressure drops below the minimum operating pressure.

4.4.3 Mechanically Controlled Operating Valves

Mechanically controlled operating valves shall not be used. Existing terminal stopping devices consisting of an automatic stop valve independent of the normal control valve and operated by the movement of the car as it approaches the terminals, where provided, may be retained.

4.4.4 Supply Piping and Fittings

Supply piping and fittings shall be in sound condition and secured in place.

SECTION 4.5
TANKS

4.5.1 General Requirements

(a) Capacity. All tanks shall be of sufficient capacity to provide for an adequate liquid reserve to prevent the entrance of air or other gas into the system.

(b) Minimal Liquid Level Indicator. The permissible minimum liquid level shall be clearly indicated.

4.5.2 Pressure Tanks

(a) Vacuum Relief Valves. Tanks subject to vacuum sufficient to cause collapse shall be provided with one or more vacuum relief valves with openings of sufficient size to prevent collapse of the tank.

(b) Gage Glasses. Tanks shall be provided with one or more gage glasses attached directly to the tank and equipped to shut off the liquid automatically in case of failure of the glass. The gage glass or glasses shall be so located as to indicate any level of the liquid between permissible minimum and maximum levels, and shall be equipped with a manual cock at the bottom of the lowest glass.

(c) Pressure Gage. Tanks shall be provided with a pressure gage that will indicate the pressure correctly to not less than 1½ times the pressure setting of the relief valve. The gage shall be connected to the tank or water column by pipe and fittings with a stop cock in such a manner that it cannot be shut off from the tank except by the stop cock. The stop cock shall have a "T" or lever handle set in line with the direction of flow through the valve when open.

(d) Inspector's Gage Connection. Tanks shall be provided with 0.25 in. (6.3 mm) pipe size valve connection for attaching an inspector's pressure gage while the tank is in service.

(e) Liquid Level Detector. Tanks shall be provided with a means to render the elevator inoperative if for any reason the liquid level in the tank falls below the permissible minimum.

(f) Handholes and Manholes. Tanks shall be provided with means for internal inspection.

(g) Piping and Fittings for Gages. Piping and fittings for gage glasses, relief valves, and pressure gages shall be of a material that will not be corroded by the liquid used in the tank.

SECTION 4.6
TERMINAL STOPPING DEVICES

Terminal stopping devices shall conform to the requirements of 3.9.1.

SECTION 4.7
OPERATING DEVICES AND CONTROL EQUIPMENT

4.7.1 Operating Devices

Operating devices shall conform to the requirements of 3.10.1 and 3.10.2.

4.7.2 Top-of-Car Operating Devices

Top-of-car operating devices shall be provided and shall conform to the requirements of 3.10.3, except for uncounterweighted elevators having a rise of not more than 15 ft (4.57 m).

The bottom normal terminal stopping device shall be permitted to be made ineffective while the elevator is under the control of the top-of-car operating device.

4.7.3 Anticreep Leveling Devices

Each elevator shall be provided with an anticreep leveling device conforming to the following:

(a) It shall maintain the car within 3 in. (76 mm) of the landing irrespective of the position of the hoistway door.

Copyright © 2009 by the American Society of Mechanical Engineers.
No reproduction may be made of this material without written consent of ASME.

(b) For electrohydraulic elevators, it shall be required to operate the car only in the up direction.

(c) For maintained pressure hydraulic elevators, it shall be required to operate the car in both directions.

(d) Its operation shall be permitted to depend on the availability of the electric power supply provided that

(1) the power supply line disconnecting means required by 3.10.5 is kept in the closed position at all times except during maintenance, repairs, and inspections

(2) the electrical protective devices required by 4.7.4(b) shall not cause the power to be removed from the device

4.7.4 Electrical Protective Devices

Electrical protective devices conforming to the requirements of 3.10.4, where they apply to hydraulic elevators, shall be provided and operate as follows:

(a) The following devices shall prevent operation of the elevator by the normal operating device and also the movement of the car in response to the anticreep leveling device:

(1) stop switches in the pit

(2) stop switches on top of the car

(3) car side emergency exit door electric contacts, where such doors are provided

(b) The following devices shall prevent the operation of the elevator by the normal operating device, but the anticreep leveling device required by 4.7.3 shall remain operative:

(1) emergency stop switches in the car

(2) broken rope, tape, or chain switches on normal terminal stopping devices when such devices are located in the machine room or overhead space

(3) hoistway door interlocks or hoistway door electric contacts

(4) car door or gate electric contacts

(5) hinged car platform sill electric contacts

(6) in-car stop switch, where permitted by 3.10.4(t)

4.7.5 Power Supply Line Disconnecting Means

Power supply line disconnecting means shall conform to the requirements of 3.10.5.

4.7.6 Devices for Making Hoistway Door Interlocks or Electric Contacts, or Car Door or Gate Electric Contacts Inoperative

The installation shall conform to the requirements of 3.10.7.

4.7.7 Control and Operating Circuit Requirements

Control and operating circuits shall conform to the requirements of 3.10.9.

4.7.8 Emergency Operation and Signaling Devices

Emergency operation and signaling devices shall conform to the requirements of Section 3.11.

SECTION 4.8
ADDITIONAL REQUIREMENTS FOR COUNTERWEIGHTED HYDRAULIC ELEVATORS

Counterweighted hydraulic elevators shall be roped so that the counterweight shall not strike the overhead when the car is resting on its fully compressed buffer. Counterweighted hydraulic elevators shall conform to the requirements of Section 3.2 where applicable.

Where counterweights are provided, counterweight buffers shall not be provided.

SECTION 4.9
ADDITIONAL REQUIREMENTS FOR ROPED-HYDRAULIC ELEVATORS

4.9.1 Top Car Clearance

Roped-hydraulic driving machines, whether of the vertical or horizontal type, shall be so constructed and so roped that the piston will be stopped before the car can be drawn into the overhead work. The top car clearance shall meet the requirements of 2.4.4.

4.9.2 Top Counterweight Clearance and Bottom Counterweight Runby

Where a counterweight is provided, the top clearance and the bottom runby shall conform to the following:

(a) *Top Clearance.* The top clearance shall be not less than the sum of the following:

(1) the bottom car runby;

(2) the stroke of the car buffers used;

(3) 6 in. (152 mm).

(b) *Bottom Runby.* The bottom runby shall be not less than the sum of the following:

(1) the distance the car can travel above its top terminal landing until the piston strikes its mechanical stop;

(2) 6 in. (152 mm).

The minimum runby specified shall not be reduced by rope stretch.

4.9.3 Protection of Spaces Below Hoistway

Where the hoistway does not extend to the lowest floor, the space below the pit shall be enclosed with permanent walls or partitions to prevent access.

4.9.4 Piston Stops

Piston stops shall be provided to bring the piston to rest at either end of the piston travel from maximum speed in the up direction, under full pressure without damage to the driving machine, piston, piston joints, cylinder, cylinder couplings, or any other part of the hydraulic system.

For rated speeds exceeding 100 ft/min (0.51 m/s) where a solid metal stop is provided, means other than the normal terminal stopping device shall be provided

Copyright © 2009 by the American Society of Mechanical Engineers.
No reproduction may be made of this material without written consent of ASME.

to retard the car to 100 ft/min (0.51 m/s) with a retardation not greater than gravity, before striking the stop.

4.9.5 Piston Connections

(a) Equalizing Crosshead. Where more than one piston is used on the puller-type roped-hydraulic elevators (see Nonmandatory Appendix B), an equalizing crosshead shall be provided for the attachment of the rods to the traveling sheave frame to ensure an equal distribution of the load to each rod.

(b) Equalizing or Cup Washers. Equalizing or cup washers shall be provided under piston rod nuts to ensure a true bearing.

(c) Piston Rods. Piston rods of the puller-type hydraulic elevators shall have a factor of safety of not less than 8 based on the cross-sectional area at the root of the thread of the material used. A true bearing shall be maintained under the nuts of both ends of the piston rod to prevent eccentric loadings on the rod.

4.9.6 Car Safety Devices

Car safety devices conforming to the requirements of Section 3.5, except 3.5.2, shall be provided. Counterweight safeties shall not be provided.

4.9.7 Speed Governors

Car speed governors conforming to the requirements of Section 3.6 shall be provided.

4.9.8 Sheaves

Sheaves shall be cast iron or steel and shall have finished grooves for ropes.

The traveling sheaves shall be guided by means of metal guides and guide shoes. The guide shoes shall be permitted to be equipped with nonmetallic inserts. Sheave frames, where used, shall be constructed of structural or forged steel and shall be designed and constructed with a factor of safety not less than 8 for the material used.

Single continuous straps (known as U-strap connection) shall not be used for frames or as connections between piston rods and traveling sheaves.

4.9.9 Slack-Rope Device

Roped-hydraulic elevators shall be provided with a slack-rope device and switch of the enclosed, manually reset type which shall cause the electric power to be removed from the pump motor and the valves if the hoisting ropes become slack or are broken.

4.9.10 Suspension Ropes and Their Connections

All elevators, except freight elevators that do not carry passengers or freight handlers and have no means of operation in the car, shall conform to the following requirements.

(a) Suspension ropes shall conform to the requirements of 3.12.1, 3.12.2, 3.12.3, 3.12.5, 3.12.8, and 3.12.9.

(b) The minimum number of hoisting or counterweight ropes used for roped hydraulic elevators shall not be less than two.

(c) The minimum diameter shall be 0.375 in. (9.5 mm) and the outer wires of the rope shall be not less than 0.024 in. (0.61 mm) in diameter. The term "diameter" where used in this Section shall refer to the nominal diameter as given by the rope manufacturer.

Copyright © 2009 by the American Society of Mechanical Engineers.
No reproduction may be made of this material without written consent of ASME.

Part V
Escalators

SCOPE

This Part applies to escalators used to transport passengers.

SECTION 5.1
CONSTRUCTION

5.1.1 Balustrades

The balustrade shall be totally closed except where the handrail enters the newel base. Gaps between interior panels are permitted provided that they are not wider than 0.1875 in. (4.8 mm) and the edges are rounded or beveled.

5.1.2 Clearance Between Skirt and Step

The clearance on each side of the steps between the step tread and the adjacent skirt panel shall be not more than 0.1875 in. (4.8 mm).

5.1.3 Guards at Ceiling or Soffit Intersections

(a) Guard Required. A solid guard shall be provided in the intersection of the angle of the outside balustrade (deck board) and the ceiling or soffit, except as indicated in 5.1.3(b). The vertical edge of the guard shall be a minimum of 8 in. (203 mm). The escalator side of the vertical face of the guard shall be flush with the face of the wellway.

The exposed edge of the guard shall be rounded and have a minimum width of 0.25 in. (6.4 mm).

(b) Guard Not Required. Guards are not required under the following conditions:

(1) on high decks where the clearance of the outside edge of the deck and the ceiling or soffit is more than 12 in. (305 mm) or where the projected intersection of the outside deck and the ceiling or soffit is more than 24 in. (610 mm) from the centerline of the handrail;

(2) on low decks where the centerline of the handrail is more than 14 in. (356 mm) from the ceiling or soffit.

5.1.4 Antislide Device

On high deck balustrades, antislide devices shall be provided on decks or combination of decks when the outer edge of the deck is greater than 12 in. (305 mm) from the centerline of the handrail or on adjacent escalators when the distance between centerline of the handrails is greater than 16 in. (406 mm).

These devices shall consist of raised objects fastened to the decks, not closer than 4 in. (102 mm) to the handrail and spaced not greater than 6 ft (1.83 m) apart. The height shall be not less than 0.75 in. (19 mm). There shall be no sharp corners or edges.

5.1.5 Handrails

Each balustrade shall be provided with a handrail moving in the same direction and at substantially the same speed as the steps.

5.1.6 Handrail Guards

Hand or finger guards shall be provided at the point where the handrail enters the balustrade.

5.1.7 Step Risers

(a) Escalators having cleated risers shall be provided with vertical cleats which mesh with slots on the adjacent step tread as the steps make the transition from the incline to the horizontal.

(b) Escalators having smooth curved surface risers shall be provided with means to cause the opening of the power circuits to the escalator driving machine motor and brake should a step be displaced against the upthrust track at the upper and lower curves in the passenger carrying line of the track system.

5.1.8 Slotting of Step Treads

The tread surface of each step shall be slotted in a direction parallel to the travel of the steps.

5.1.9 Combplates

There shall be a combplate at the entrance and at the exit of every escalator. The combplate teeth shall be meshed with and set into the slots in the tread surface so that the points of the teeth are always below the upper surface of the treads.

5.1.10 Deck Barricades

A barricade to restrict access to the outer deck on low deck exterior balustrades shall be provided at the top and bottom ends of each escalator where the outer deck width exceeds 5 in. (127 mm). On parallel abutting unit, this protection shall be provided where the combined outer deck width exceeds 5 in. (127 mm). The barricade shall extend to a height that is nominally 4 in. (102 mm) below the top of the handrail.

When an escalator is not located at the edge of a floor surface, the barricade shall be installed on the outer deck at a point 40 in. (1 020 mm) above the floor where

Copyright © 2009 by the American Society of Mechanical Engineers.
No reproduction may be made of this material without written consent of ASME.

the bottom of the barricade intersects the outer deck. Barricades are permitted to be made of glass or plastic, provided that they conform to the requirements of ANSI Z97.1 or 16 CFR Part 1201, except that there shall be no requirement for the panels to be transparent. Plastic bonded to the basic supporting panels is not required to conform to the requirements of ANSI Z97.1. All exposed barricade attachment fastener heads shall be of the tamper-resistant type.

5.1.11 Step/Skirt Performance Index

(a) The step/skirt performance index, when the escalator is subjected to the test specified in requirement 8.11.4.2.19 of A17.1–2004, shall be the maximum value of the recorded instantaneous step/skirt index $e^y/(e^y + 1)$, where

(SI Units)

e = 2.7183
y = $-3.77 + 2.37\ (\mu) + 0.37\ (L_g)$
μ = the sliding coefficient of friction of a polycarbonate test specimen on the skirt panel at the measurement point calculated when subjected to a 110 N normal load.
L_g = the clearance between the step and the adjacent skirt panel when 110 N is applied from the step to skirt panel, mm

The applied load shall not deviate from 110 N by more than ± 11 N. The load shall be distributed over a round or square area no less than 1 940 mm^2 and no more than 3 870 mm^2.

(Imperial Units)

e = 2.7183
y = $-3.77 + 2.37\ (\mu) + 9.3\ (L_g)$
μ = the sliding coefficient of friction of a polycarbonate test specimen on the skirt panel at the measurement point calculated when subjected to a 25 lbf normal load.
L_g = the clearance between the step and the adjacent skirt panel when 25 lbf is applied from the step to skirt panel, in.

The applied load shall not deviate from 25 lbf by more than ±2.5 lbf. The load shall be distributed over a round or square area no less than 3 in.^{2} and no more than 6 in.^{2}.

(b) The step/skirt performance index polycarbonate test specimen shall conform to the following specifications:

(1) Material: polycarbonate without fillers

(2) Color: natural, no pigments

(3) Finish: glossy (roughness less than 0.8 μm (32 μin.)

(4) Area in contact with skirt panel: 2 900 ± 325 mm^2 (4.5 ± 0.5 in.^{2}) and at least 0.8 mm (0.03 in.) thick

(5) Specification: GE Lexan 100 series or equivalent polycarbonate

(c) The escalator step/skirt performance index shall be

(1) ≤ 0.15

(2) ≤ 0.4 when a skirt deflector device is provided

SECTION 5.2
BRAKES

5.2.1 General Requirements

Escalators shall be provided with a brake capable of stopping the up or down traveling escalator with any load up to brake rated load. The brake shall be mechanically or magnetically applied. If the brake is magnetically applied, a ceramic permanent magnet shall be used.

5.2.2 Main Drive Shaft Brake

If the escalator brake is separated from the main drive shaft by a chain used to connect the driving machine to the main drive shaft, a mechanically or magnetically applied brake capable of stopping a down running escalator with brake rated load shall be provided on the main drive shaft. If the brake is magnetically applied, a ceramic permanent magnet shall be used.

SECTION 5.3
OPERATING AND SAFETY DEVICES

5.3.1 Starting Switches

Starting switches shall be of the key-operated type and shall be located so that the escalator steps are within sight. Automatic starting by any means is prohibited.

The starting switches shall be of the continuous-pressure spring-return type. Each key position shall be clearly marked with its associated operating mode. The key shall only be removable in the spring-return position.

5.3.2 Emergency Stop Buttons

There shall be a red stop button accessibly located at the top and bottom landings of each escalator. The operation of either one of these buttons shall cause the interruption of power to the escalator. It shall be impossible to start an escalator by means of these buttons. These buttons shall be marked "EMERGENCY STOP."

5.3.3 Speed Governor

(a) Speed Governor Required. A speed governor shall be provided, except as specified in 5.3.3(b). Its operation shall cause the interruption of power to the driving machine if the speed of the steps exceeds a predetermined value, which shall be not more than 40% above the rated speed.

(b) Speed Governor Not Required. The speed governor is not required where an alternating current squirrel

Copyright © 2009 by the American Society of Mechanical Engineers.
No reproduction may be made of this material without written consent of ASME.

cage induction motor is used and the motor is directly connected to the driving machine.

NOTE [5.3.3(b)]: The governor shall be permitted to be omitted in such case even though a chain is used to connect the sprocket on the driving machine to the sprocket on the main drive shaft.

5.3.4 Broken Step-Chain Device

A broken step-chain device shall be provided to cause the interruption of power to the driving machine if a step chain breaks, and, where no automatic chain tension device is provided, if excessive sag occurs in either step chain.

5.3.5 Application of Brake

The brake shall automatically stop the escalator when any of the safety devices function.

5.3.6 Broken Drive-Chain Device

When the driving machine is connected to the main drive shaft by a chain, a device shall be provided which shall cause the application of the brake on the main drive shaft and also stop the drive machine if the drive chain parts.

5.3.7 Skirt Obstruction Device

Means shall be provided to stop the escalator if an object becomes accidently caught between the step and the skirt as the step approaches the upper or lower combplate. The device shall be located so that the escalator will stop before that object reaches the combplate.

5.3.8 Rolling Shutter Device

Rolling shutters, if used, shall be provided with a device that shall be actuated as the shutters begin to close to cause the opening of the power circuit to the escalator driving machine motor and brake.

5.3.9 Reversal Stop Device

Means shall be provided to cause the opening of the power circuit to the driving machine motor and brake in case of accidental reversal of travel while the escalator is operating in the ascending direction.

5.3.10 Tandem Operation

Tandem operation escalators shall be electrically interlocked where traffic flow is such that bunching will occur if the escalator is carrying passengers away from the intermediate landing stops.

The electrical interlocks shall stop the escalator carrying passengers into the common intermediate landing if the escalator carrying passengers away from the landing stops. These escalators shall also be electrically interlocked to assure that they run in the same direction.

5.3.11 Caution Signs

A caution sign shall be located at the top and bottom landings of each escalator, readily visible to the boarding passengers. The sign shall include the following words:

(a) Caution
(b) Passengers Only
(c) Hold Handrail
(d) Attend Children
(e) Avoid Sides

The sign shall be standard for all escalators and be identical in format, size, color, wording, and pictorials to that shown in Fig. 5.3.11. The sign shall be durable and have a maximum thickness of 0.25 in. (6.4 mm) with rounded or beveled corners and edges.

SECTION 5.4
LIGHTING OF ESCALATORS

Landing floor plates and all exposed step treads shall be illuminated with a lighting intensity of not less than 5 fc (54 lx). The illumination of these surfaces shall be of uniform intensity and not contrast materially with that of the surrounding area.

SECTION 5.5
ENTRANCE AND EGRESS ENDS

5.5.1 Combplates

There shall be a combplate, to which combs are fastened, at the entrance and at the exit of every escalator.

The comb teeth shall be meshed with and set into the slots in the tread surfaces so that the points of the teeth are always below the upper surface of the treads.

Combplates shall be adjustable vertically.

5.5.2 Distinction Between Comb and Step

There shall be a visual contrast between the comb and step, achieved by color, pattern, or texture.

5.5.3 Adjacent Floor Surfaces

The adjacent floor surfaces at each landing shall be continuous with the top of the landing plate with no abrupt change in elevation more than 0.25 in. (6.4 mm).

5.5.4 Safety Zone

The entry and exit zone shall be kept clear of all obstacles. The width of the zone shall be not less than the

Copyright © 2009 by the American Society of Mechanical Engineers.
No reproduction may be made of this material without written consent of ASME.

Fig. 5.3.11 Caution Sign

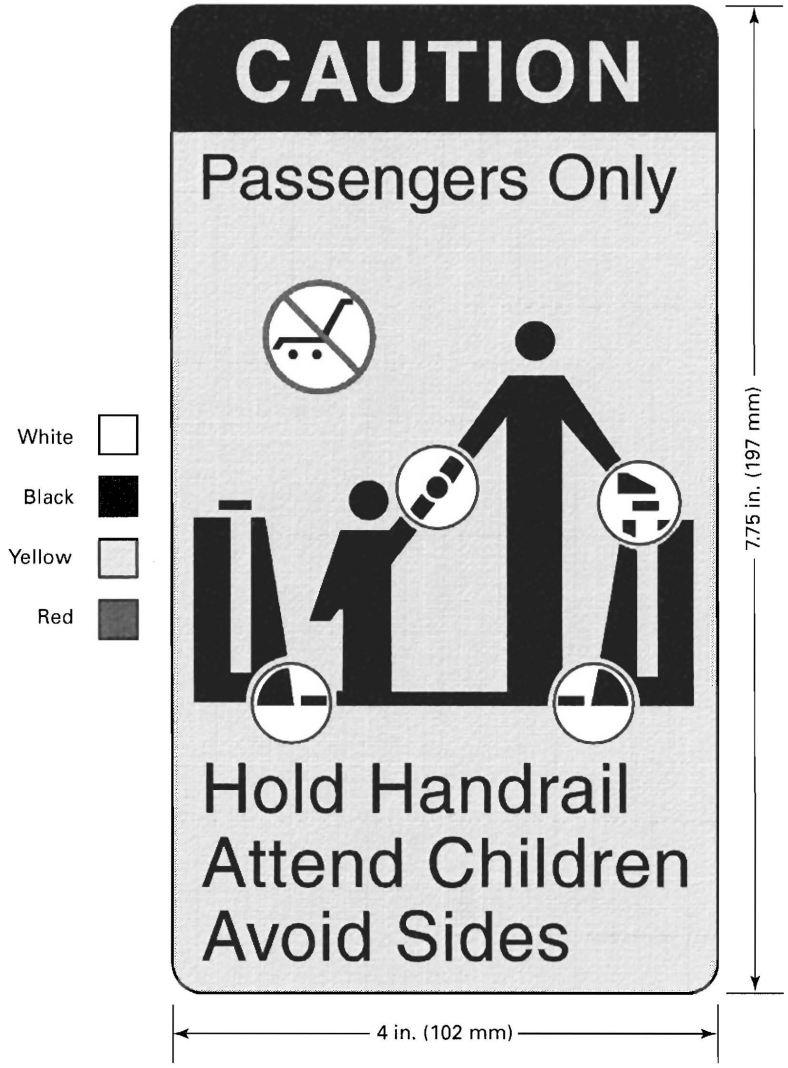

Copyright © 2009 by the American Society of Mechanical Engineers.
No reproduction may be made of this material without written consent of ASME.

width between the centerlines of the handrails plus 8 in. (203 mm). The length of the zone, measured from the end of the newel, shall be no less than twice the distance between the centerlines of the handrails. These dimensions are absolute minimums and every consideration should be given to traffic patterns.

5.5.5 Landing Access Plates

Access plates at the top and bottom landings shall be properly located and securely fastened in place when no more than 70 lbf (311 N) effort is required to open the access plate.

Copyright © 2009 by the American Society of Mechanical Engineers.
No reproduction may be made of this material without written consent of ASME.

Part VI
Dumbwaiters

SCOPE

This Part applies to hand and power dumbwaiters. It is not intended that this Part applies to hand dumbwaiters serving two consecutive floors or less and having a capacity of 20 lb (9.1 kg) or less and a car platform area of not more than 2 ft^2 (0.19 m^2). Section 6.1 applies to all dumbwaiters. Section 6.2 applies only to electric and hand dumbwaiters. Section 6.3 applies only to hydraulic dumbwaiters.

SECTION 6.1
HOISTWAY, HOISTWAY ENCLOSURES, AND RELATED CONSTRUCTION

Hoistways, hoistway enclosures, and related construction shall conform to the requirements of Part II except as modified by this Section. Rules referenced by other Rules are applicable as modified by this Part. Where the term "elevator" is used in a referenced Rule, it shall mean "dumbwaiter."

6.1.1 Machine Rooms and Machinery Spaces

Dumbwaiter machinery shall be permitted to be located within the hoistway or in a separate machine room. Where the dumbwaiter machine is located within the hoistway, the requirements of 2.2.2 and 2.2.4 do not apply.

6.1.2 Clearances and Runbys

The requirements of Section 2.4 do not apply.

6.1.2.1 Bottom and Top Car Clearances and Runbys for Cars and Counterweights. Bottom and top car clearances and runbys for cars and counterweights shall conform to the following:

(a) When the car reaches its maximum limit of downward travel and the counterweight is at its maximum upward travel, no part of the car or any equipment attached thereto shall strike any part of the pit or floor beneath the lowest landing or equipment located in the hoistway except a buffer or bumper, and no part of the counterweight or equipment attached thereto shall strike any part of the overhead structure or equipment located in the hoistway except a mechanical stop or buffer.

(b) When the car reaches its maximum limit of upward travel and the counterweight is at its maximum downward travel, no part of the car or equipment attached thereto shall strike any part of the overhead structure or equipment located in the hoistway except a mechanical stop or buffer, and no part of the counterweight or equipment attached thereto shall strike any part of the pit or floor beneath the lowest landing or equipment located in the hoistway except a buffer or bumper.

6.1.2.2 Horizontal Car and Counterweight Clearances. For dumbwaiters with a rated load of 500 lb (227 kg) or less, the clearance between the car and hoistway enclosure shall be not less than 0.5 in. (13 mm). This clearance shall be permitted to be further reduced when means are provided to restrain the car within the guide rails and hoistway, subject to the approval of the authority having jurisdiction.

6.1.3 Doors or Gates Required

The requirements in 2.6.1 do not apply. All hoistway-landing openings shall be provided with entrances, which shall guard the full height and width of the opening.

(a) For power dumbwaiters, the doors shall not open to a 1 in. (25 mm) greater width and height than the width and height of the car, unless the car is being removed or installed.

(b) For hand dumbwaiters, the width of the door openings shall not exceed the width of the car by more than 6 in. (152 mm). The height of the door shall not exceed 54 in. (1 372 mm).

6.1.4 Closing of Hoistway Doors

The requirements of 2.6.2 do not apply. All doors shall be kept closed except the door at the floor at which the car is being loaded or unloaded, or being operated for hand-operated dumbwaiters. Each hoistway entrance for hand-operated dumbwaiters shall have conspicuously displayed on the landing side, in letters not less than 2 in. (51 mm) high, the words: "DANGER-DUMBWAITER-KEEP-CLOSED."

On hand dumbwaiters, manually operated doors shall be permitted to be equipped with devices to close them automatically when released by heat or smoke. Self-closing doors shall be permitted to be equipped with hold-open devices, provided that such devices will release the doors in case of excessive heat or excessive smoke.

Copyright © 2009 by the American Society of Mechanical Engineers.
No reproduction may be made of this material without written consent of ASME.

6.1.5 Hoistway-Door Vision Panels

Hoistway-door vision panels (2.6.3) are not required. Where provided they shall comply with the requirements of 2.6.3(b), (c), (d), (g), and (i) and the total area of one or more vision panels in any hoistway door shall not exceed 25 in.^{2} (0.016 m^2).

6.1.6 Hoistway-Door or Gate-Locking Devices

The requirements of 2.7.1 do not apply.

(ED) **6.1.6.1 Hoistway-Door Locking Devices for Power Dumbwaiters**

(a) At landings where the bottom of the door opening is 24 in. (610 mm) or more above the floor, the hoistway doors shall be provided with hoistway-door combination mechanical locks and electric contacts. When locks and contacts are used, they shall be so arranged that the hoistway door is locked when the car is more than 3 in. (76 mm) from the landing.

(b) At landings where the bottom of the door opening is less than 24 in. (610 mm) above the floor, the hoistway doors shall be provided with hoistway-door interlocks.

(c) Hoistway-door combination mechanical locks and electric contacts shall be permitted to be used for hoistway doors under the following conditions:

(1) dumbwaiters with a rise of 15 ft (4.57 mm) or less — for the top landing door and for any door whose sill is located not more than 4 ft (1 219 mm) below the sill of the top landing door

(2) dumbwaiters with any rise — for any door whose sill is within 5 ft (1 524 mm) of the bottom of the hoistway

6.1.6.2 Hoistway-Door Locking Devices for Hand Dumbwaiters. Hoistway doors shall be provided with spring-type latches to hold them in the closed position. Such latches shall be releasable from both the hoistway and landing side, irrespective of the position of the car.

6.1.7 Parking Devices

The requirements of 2.7.2 do not apply.

6.1.8 Access to Hoistway

Hoistway door unlocking devices, where provided, shall conform to 2.7.3(a).

Hoistway access switches, where provided, shall conform to 2.7.3(b)(1), (2), (3), (4)(a), (4)(b), (4)(c). The requirements of 2.7.3(b)(4)(c) also apply, except that the operating devices at the access landing shall be permitted to remain operative.

6.1.9 Kinetic Energy and Force Limitations for Power-Operated Vertically Sliding Doors

The requirements of 2.8.1 also apply to power-operated vertically sliding doors. The requirements of 2.8.1(b) do not apply.

6.1.10 Reopening Devices for Power-Operated Car Doors or Gates

The requirements of 2.8.2 apply only to power-operated hoistway doors and car doors or gates where closing is by automatic means; where no car door or gate is provided, the requirement applies to the hoistway door.

SECTION 6.2
MACHINERY AND EQUIPMENT FOR HAND AND ELECTRIC DUMBWAITERS

Machinery and equipment for hand and electric dumbwaiters shall conform to the requirements of Part III, except as modified by this Section. Rules referenced by other Rules are applicable as modified by this Part. Where the term "elevator" is used in a referenced Rule, it shall mean "dumbwaiter."

6.2.1 Buffers and Bumpers

Section 3.1 does not apply. Cars and counterweights shall be provided with buffers or bumpers. Buffers shall be provided where required by Section 2.5.

6.2.2 Car Frames and Platforms

The requirements of 3.3.1 do not apply. The car shall be provided with a platform capable of withstanding the loading conditions to which the dumbwaiter is subjected. The requirements in 3.3.2 apply only where inching devices or truck-zoning devices are provided.

6.2.3 Car Enclosures

The requirements of 3.4.1 do not apply. The car enclosure walls shall be of solid, grill, or perforated construction. Car enclosure walls shall be of such strength and so designed and supported that when subjected to a leaning or falling rated load on the car, the car enclosure walls will not deflect or deform to the extent that the running clearances are reduced below the minimum specified in 6.1.2.2. Perforated portions of enclosure shall reject a ball 1.5 in. (38 mm) in diameter. Nonmetal cars shall be reinforced with metal from the bottom of the car to the point of suspension. Metal car sections shall be riveted, welded, or bolted together. Cars shall be permitted to be provided with hinged, permanent, or removable shelves. The maximum inside height of the car at any point shall not exceed 4 ft (1 219 mm) (see also Rule 701.8). Hinged or removable panels shall not be provided in car tops.

6.2.4 Car Doors and Gates

The requirements of 3.4.3 do not apply. A car door or gate is not required but may be provided. Each door or gate when provided on a power dumbwaiter shall be equipped with a contact that will prevent operation of the driving machine, unless the door or gate panel(s) are in the closed position.

Copyright © 2009 by the American Society of Mechanical Engineers.
No reproduction may be made of this material without written consent of ASME.

6.2.5 Emergency Exits

The requirements of 3.4.4 do not apply.

6.2.6 Car Illumination

The requirements of 3.4.5 do not apply. If in-car lighting is provided, the tubes or bulbs shall be protected against accidental breakage.

6.2.7 Safeties

Car and counterweight safeties, when provided, shall conform to the requirements of Section 3.5. See Section 2.5 for requirements for providing car and counterweight safeties.

6.2.9 Capacity and Loading

The requirements of Section 3.7 do not apply.

6.2.9.1 Net Platform Area. The inside net platform area shall not be more than 9 ft^2 (0.84 m^2).

6.2.9.2 Capacity Plate. A capacity plate shall be fastened in a conspicuous place in the car and shall indicate the rated load in letters and numerals not less than 0.25 in. (6.4 mm) high. The letters and figures shall be stamped, etched, cast, or otherwise applied to the faces and shall remain permanently and readily legible.

6.2.9.3 "No Riders" Signs. A sign stating "NO RIDERS" shall be located in the car in letters not less than 0.5 in. (13 mm) high.

6.2.10 Driving Machines and Sheaves

6.2.10.1 Hand Dumbwaiters. Hand driving machines shall be equipped with hand brakes or automatic brakes which will sustain the car and its rated load. When the brake is applied, it shall remain locked in the "ON" position until released by the operator.

6.2.10.2 Belt Driving Machines. The requirements of 3.8.3 do not apply. Belts used as the driving means between the motor and the machine of power dumbwaiters shall conform to the following requirements.

(a) Where flat belts are used, the rated speed shall not be more than 50 ft/min (0.25 m/s).

(b) Where multiple V-belts are used, the rated speed shall not be more than 150 ft/min (0.76 m/s).

6.2.11 Normal Terminal Stopping Devices

The requirements of 3.9.1(b) do not apply.

6.2.12 Final Terminal Stopping Devices

Final terminal stopping devices are required on:

(a) Winding-drum-type dumbwaiters;

(b) Traction dumbwaiters having a rated speed in excess of 150 ft/min (0.76 m/s).

6.2.13 Operating Devices and Control Equipment

Operating devices and control equipment shall comply with Section 3.10 except as modified by the following:

(a) 3.10.1 applies to power dumbwaiters.

(b) 3.10.2 does not apply.

(c) top-of-car operating devices are not required. Where provided, they shall conform to 3.10.3. Where top-of-car operating devices are provided, safeties shall be provided in accordance with the requirements of Section 3.5.

(d) 3.10.4(e) does not apply. When a top-of-car operating device is provided, a stop switch conforming in design and operation to that specified in 3.10.4(e) shall be provided.

(e) 3.10.4(g) applies only where a speed governor is provided.

(f) 3.10.4(h) — see 6.2.12.

(g) 3.10.4(i) does not apply.

(h) 3.10.4(p) — see 6.2.4.

(i) 3.10.4(r) does not apply.

(j) 3.10.4(s) does not apply where car doors or gates are provided.

(k) 3.10.6 applies. When single-phase AC motors are provided, they shall come to a complete stop before reversing.

6.2.14 Emergency Operation and Signaling Devices

The requirements of Section 3.11 do not apply.

6.2.15 Suspension Means

The requirements of 3.12.1 do not apply.

(a) Power Dumbwaiters

(1) Cars and counterweights for power dumbwaiters, except for dumbwaiters having rack and pinion or screw-type driving machines, shall be suspended by one or more iron or steel-wire hoisting ropes or chains.

(2) Wire ropes shall be permitted to have marlin covers.

(3) Chains, where used, shall be roller, block, or multiple-link silent type.

(b) Hand Dumbwaiters

(1) Dumbwaiters having a rated load exceeding 75 lb (34 kg) shall be suspended by one or more steel wire ropes or chains having a factor of safety not less than 4.5.

(2) Dumbwaiters having a rated load of 75 lb (34 kg) or less shall be permitted to be suspended by one or more manila, braided-cotton, or equivalent ropes having a factor of safety of not less than 6.

6.2.16 Chain Data

The requirements of 3.12.2 apply where ropes are provided. Where chains are provided, a metal data tag shall

Copyright © 2009 by the American Society of Mechanical Engineers.
No reproduction may be made of this material without written consent of ASME.

be securely attached to one of the chain fastenings. This tag shall bear the following chain data:

(a) type of chain
(b) standard chain number
(c) manufacturer's rated breaking strength
(d) month and year the chains were installed
(e) name of the person or firm who installed the chain
(f) name of the manufacturer of the chains

6.2.17 Factor of Safety

The requirements of 3.12.3 do not apply.

6.2.18 Minimum Number and Diameter of Suspension Ropes

The requirements of 3.12.4 do not apply.

6.2.19 Suspension Rope Fastenings

The requirements of 3.12.8 do not apply. Fastening of suspension means shall be in accordance with the requirements of ASME A17.1–2000, requirement 7.2.6.8 when the suspension means are replaced.

SECTION 6.3
MACHINERY AND EQUIPMENT FOR HYDRAULIC DUMBWAITERS

Machinery and equipment for hydraulic dumbwaiters shall conform to the requirements of this Section. Where the term "elevator" is used in a referenced Rule, it shall mean "dumbwaiter."

6.3.1 Car Buffers or Bumpers

The requirements of 6.2.1 apply to hydraulic dumbwaiters.

6.3.2 Counterweights

The requirements of Section 3.2 apply to hydraulic dumbwaiters.

6.3.3 Car Frames and Platforms

The requirements of 6.2.2 apply to hydraulic dumbwaiters.

6.3.4 Car Enclosures, Car Doors and Gates, and Car Illumination

The requirements of 6.2.3 through 6.2.6 apply to hydraulic dumbwaiters.

6.3.5 Car Safeties

When car safeties are provided, they shall conform to the requirements of Section 3.5.

6.3.6 Counterweight Safeties

Counterweight safeties, where provided (Section 2.5), shall conform to the requirements of 3.5.2, provided that safeties shall be operated as a result of the breaking or slackening of the counterweight suspension ropes, irrespective of the rated speed of the dumbwaiter.

6.3.7 Capacity and Loading

The requirements of 6.2.9.1 through 6.2.9.3 apply to hydraulic dumbwaiters.

6.3.8 Driving Machines, Valves, Supply Piping, Fittings, and Tanks

The requirements of Section 4.4 apply to direct plunger hydraulic driving machines, valves, supply piping, fittings, and tanks of hydraulic dumbwaiters.

The requirements of Section 4.9 apply to roped-hydraulic dumbwaiters.

6.3.9 Terminal Stopping Devices

The requirements of 6.2.11 and 6.2.12 apply to hydraulic dumbwaiters.

6.3.10 Operating Devices and Control Equipment

The requirements of 6.2.13 apply to hydraulic dumbwaiters.

6.3.10.1 Anticreep Leveling Devices. Each dumbwaiter shall be provided with an anticreep leveling device conforming to the following requirements:

(a) It shall maintain the car within 1 in. (25 mm) of the landing irrespective of the position of the hoistway door.

(b) For electrohydraulic dumbwaiters, it shall be required to operate the car only in the up direction.

(c) For maintained pressure hydraulic dumbwaiters, it shall be required to operate the car in both directions.

(d) Its operation shall be permitted to depend on the availability of the electric power supply provided that:

(1) the power supply line disconnecting means is kept in the closed position at all times except during maintenance, repairs, and inspection

(2) the electrical protective devices shall not cause the power to be removed from the device

6.3.10.2 Electrical Protective Devices. Electrical protective devices conforming to 3.10.4 as modified by 6.2.13 shall be provided.

(a) The following devices shall prevent operation of the dumbwaiter by the normal operating device and also the movement of the car in response to the anticreep leveling device:

(1) stop switches in the pit

(2) stop switches on top of the car

(b) The following devices shall prevent the operation of the dumbwaiter by the normal operating device, but the anticreep leveling device required by 6.3.10.1 shall remain operative:

(1) broken rope, tape, or chain switches on normal stopping devices when such devices are located in the machine room or overhead space

Copyright © 2009 by the American Society of Mechanical Engineers.
No reproduction may be made of this material without written consent of ASME.

(2) hoistway door interlocks or hoistway door contacts

(3) car door or gate electric contacts

(4) hinged car platform sill electric contacts

6.3.10.3 Power Supply Line Disconnecting Means. Power supply line disconnecting means shall conform to the requirements of 3.10.5.

6.3.10.4 Devices for Making Hoistway Door Interlocks or Electric Contacts, or Car Door or Gate Electric Contacts Inoperative. The installation shall conform to the requirements of 3.10.7.

6.3.10.5 Control and Operating Circuit Requirements. Control and operating circuits shall conform to the requirements of 3.10.9.

6.3.11 Additional Requirements for Counterweighted Hydraulic Dumbwaiters

Counterweighted hydraulic dumbwaiters shall be roped so that the counterweight will not strike the overhead when the car is resting on its fully compressed buffer. Counterweighted hydraulic dumbwaiters shall conform to the requirements of Section 3.12 as modified by 6.2.15 through 6.2.19 where applicable.

Where counterweights are provided, counterweight buffers shall not be provided.

Copyright © 2009 by the American Society of Mechanical Engineers.
No reproduction may be made of this material without written consent of ASME.

Part VII
Hand Elevators

SCOPE

This Part applies to hand-operated elevators.

SECTION 7.1
HOISTWAY, HOISTWAY ENCLOSURES, AND RELATED CONSTRUCTION

Hoistway, hoistway enclosures, and related construction shall conform to the requirements of 7.1.1 through 7.1.9.

7.1.1 Enclosures for Machines and Control Equipment

Elevator machines and their control equipment shall be permitted to be located inside the hoistway enclosure at the top or bottom without intervening enclosures or platform.

7.1.2 Access to Machines and Sheaves

Adequate permanent means of access shall be provided to sheaves and machines for maintenance and inspection.

7.1.3 Pit

A pit is not required.

7.1.4 Clearances and Runbys

Clearances and runbys for car and counterweight shall conform to the requirements of Section 2.4.

7.1.5 Hoistway Entrances: Type of Entrances

Entrances will be of the following types:

(a) self-closing or manually operated horizontally sliding or swinging, single section.

(b) self-closing or manually operated horizontally swinging, two section (Dutch type) with one section above the other and the lower section extending not less than 42 in. (1 067 mm) above the floor, and arranged to be opened only when the car is in the landing zone and after the upper section has been opened, and to be closed by the closing of the upper section.

(c) manually operated vertically sliding counterweighted single or multisection.

(d) manually operated vertically sliding biparting counterbalanced.

(e) horizontal openings in sidewalks or other areas exterior to the building shall be protected by weathertight hinged metal doors or vertically lifting covers having a nonslip upper surface. Such doors or covers shall not be used where the hoistway is located inside the building. Doors or covers shall be of sufficient strength to support safely a static load of not less than 300 lb/ft^2 (14.4 kPa) uniformly distributed.

7.1.6 Hoistway Gates for Landing Openings of Hand Elevators

Hoistway-landing openings of hand elevators equipped with horizontally sliding or swinging doors shall also be provided with vertically sliding semiautomatic gates, not less than 42 in. (1 067 mm) high, of a design that will reject a ball 2 in. (51 mm) in diameter. Gates shall be so constructed and guided as to withstand a lateral force of 100 lb (445 N) concentrated at the center of the gate without being deflected beyond the line of the landing sill, and a force of 250 lb (1 112 N) without forcing the gates from its guides or without causing it to break or be permanently deformed.

7.1.7 Closing of Hoistway Doors

All doors shall be kept closed except the door at the floor where the car is being operated or is being loaded or unloaded. Manually operated doors shall be equipped with approved devices to close them automatically when released by the action of heat. Self-closing doors shall be permitted to be equipped with hold-open devices, provided that each device shall be equipped with a fusible link that will release the door in case of excessive heat.

7.1.8 Hoistway Door Vision Panel

Hoistway door vision panels are not required.

7.1.9 Hoistway Door Locking Devices for Hand Elevator

Hoistway doors shall be provided with locking devices as follows:

(a) Door Latches. Hoistway doors shall be provided with spring-type latches to hold them in the closed position. Such latches shall be permitted to be released from both the hoistway and landing side, irrespective of the position of the car.

(b) Gate Locks. Hoistway gates with horizontally sliding or swinging type hoistway doors (see Section 1.6)

Copyright © 2009 by the American Society of Mechanical Engineers.
No reproduction may be made of this material without written consent of ASME.

shall be provided with hoistway-gate separate mechanical locks.

(c) Hoistway Gates of Hand Elevators Provided with Hoistway-Gate Separate Mechanical Locks. Hoistway gates of hand elevators provided with hoistway-gate separate mechanical locks shall be considered to be in the closed position when the gate is within 0.375 in. (9.5 mm) of contact with the landing sill.

SECTION 7.2
MACHINERY AND EQUIPMENT

Machinery and equipment for hand elevators shall conform to the requirements of 7.2.1 through 7.2.17.

7.2.1 Buffers and Bumpers

Car and counterweight buffers are not required. Solid bumpers shall be permitted to be used in lieu of buffers.

7.2.2 Counterweights

7.2.2.1 Counterweight Construction. Sections of counterweights, whether carried in frames or not, shall be secured by at least two tie rods passing through holes in the sections. The tie rods shall have lock nuts at each end, secured by cotter pins.

Hand elevator cars upon which persons are permitted to ride shall not be arranged to counterbalance each other.

7.2.3 Car Frames and Platforms

Car frames and platforms shall be of metal or sound seasoned wood designed with a factor of safety of not less than 4 for metal and 6 for wood, based on the rated load uniformly distributed.

Connections between framed members of the car frame and platform shall be riveted, bolted, or welded.

7.2.4 Car Enclosures

Cars shall be enclosed on the sides not used for entrance. The deflection of the enclosures shall be not more than 0.25 in. (6.3 mm) when subjected to a force of 75 lb (334 N) applied perpendicularly to the car enclosure at any point. The enclosure shall be secured to the car platform or frame in such a manner that it cannot work loose or become displaced in ordinary service.

(a) Glass shall not be used in elevator cars except as permitted in ASME A17.1–2000, requirement 2.14.4.7.

(b) Elevator cars upon which an operator is permitted to ride shall have not more than one compartment.

7.2.5 Emergency Exit

Emergency exits are not required.

7.2.6 Illumination of Cars and Lighting Fixtures

(a) Cars shall be provided with electric light or lights. Not less than two lamps shall be provided. The minimum illumination at the landing edge of the car platform, when the car and landing doors are open, shall not be less than the following:

(1) for passenger elevators, 5 fc (54 lx)

(2) for freight elevators 2.5 fc (27 lx)

(b) Light Control Switches. Car lights shall be controlled by a switch in the car located in or adjacent to operating device. Where a light in the hoistway is used, the light control switch shall be located adjacent to the hoistway landing doors at each landing.

(c) Passenger-Car Lighting Device. Glass used for lighting fixtures shall conform with ASME A17.1–2000, requirement 2.14.4.7. Suspended glass used in lighting fixtures shall be supported by a metal frame secured at not less than three points. Fastening devices shall not be removable from the fixture. Glass shall not be drilled for attachment. Lights, troughs, supporting wiring raceways and other auxiliary lighting equipment where used, shall be of metal except where lined with noncombustible materials for diffusing and illumination purposes, providing such combustible materials do not come in contact with lighting equipment.

(d) Guarding of Light Bulbs or Tubes in Passenger Cars. Light bulbs or tubes in passenger cars shall be so guarded as to prevent injury to passengers from breakage of the bulbs or tubes.

(e) Lamp Guards for Freight Cars. Lamps shall be equipped with substantial guards to prevent breakage.

7.2.7 Car Safety Devices

7.2.7.1 Car Safeties. Hand elevators having a rise of more than 15 ft (4.57 m) shall be provided with a car safety, attached to the underside of the car frame, capable of stopping and sustaining the car and rated load. A speed governor is not required. (ED)

7.2.8 Capacity and Loading

7.2.8.1 Capacity and Loading. The rated load of hand elevators shall be not less than 50 lb/ft^2 (2.39 kPa) of net inside car area.

7.2.9 Use of Partitions for Reducing Inside Net Platform Area

Where partitions are installed in elevator cars for the purpose of restricting the platform net area for passenger use, they shall be permanently fastened in place. Gates, doors, or handrails shall not be used for this purpose. Partitions shall be so installed as to provide for approximately symmetrical loading.

7.2.10 Driving-Machine Brakes

Driving-machine brakes shall be equipped with a hand brake or an automatic brake operating in either

Copyright © 2009 by the American Society of Mechanical Engineers.
No reproduction may be made of this material without written consent of ASME.

direction of motion of the elevator, and capable of stopping and holding the car with its rated load. When the brake has been applied, it shall remain locked in the "ON" position until released by the operator.

(08) **7.2.11 Power Attachments Not Permitted**

Power other than manual energy, shall not be applied for driving a hand elevator unless the entire installation is made to conform to all the requirements in Part 2 and Part 3 of ASME A17.1–2000.

7.2.12 Machinery and Sheave Beams, Supports for Hand Elevators

Machines, machinery, and sheaves shall be so supported and maintained in place as to effectually prevent any part from becoming loose or displaced under the conditions imposed in service.

Supporting beams, if used, shall be of steel or reinforced concrete. Beams are not required under machines, sheaves, and machinery or control equipment which are supported on floors, provided such floors are designed and installed to support the load imposed thereon.

7.2.13 Suspension Means: Type and Number Required

Suspension means shall consist of at least two wire ropes or chains.

7.2.14 Factor of Safety

The factor of safety used in determining the size and number of the suspension members shall be 5, based on the weight of the car and its rated load.

7.2.15 Length of Suspension Members

The length of suspension members shall be such as to provide the minimum top car and counterweight clearances specified in Section 2.4.

7.2.16 Capacity Plate

A metal plate shall be fastened in a conspicuous place in the elevator car and shall bear the following information in not less than 0.25 in. (6.3 mm) letters of and figures, stamped, etched, or raised on the surface of the plate:

(a) rated load in pounds

(b) the maximum number of passengers to be carried based on 150 lb (68 kg) per person (if passenger elevator)

(c) the size rated ultimate strength and material of suspension members

7.2.17 Suspension Member Data

The date of installation of the suspension members shall be shown on a metal tag attached to the suspension fastening.

Copyright © 2009 by the American Society of Mechanical Engineers.
No reproduction may be made of this material without written consent of ASME.

Part VIII
Sidewalk Elevators

SCOPE

This Part applies to sidewalk elevators.

SECTION 8.1
HOISTWAY, HOISTWAY ENCLOSURES, AND MACHINE ROOMS

8.1.1 Hoistway, Hoistway Enclosures, and Machine Rooms

Hoistway, hoistway enclosures, and machine rooms shall conform to Sections 2.1, 2.2, and 8.1.

(a) Elevators having a travel of not more than one story below the sidewalk or grade level, and having their top opening in the sidewalk or other area exterior to the buildings, are not required to have fire-resistive construction of hoistway and machine room enclosures.

(b) Hoistway and machine room enclosures may be of non-fire-resistive construction.

(c) Elevators having their hoistways located entirely outside the building with the top opening located in the sidewalk or other exterior area are not required to be enclosed at the top with fire-resistive construction.

8.1.2 Location of Hoistway and Top-Landing Opening

Sidewalk elevator hoistways shall be permitted to be located entirely outside the building with the top opening located in the sidewalk or other area exterior to the building, or the hoistway shall be permitted to be located inside the building with the top-landing opening located in the building wall facing the sidewalk or other area served, but without any opening into the interior of the building at the top landing.

8.1.3 Maximum Size of Opening Permitted in Sidewalk

The maximum clear opening permitted in a sidewalk, when the sidewalk door or cover is open, shall not exceed 5 ft (1 524 mm) at right angles to and 7 ft (2 134 mm) parallel to the building line, except by special permission of the authority having jurisdiction.

8.1.4 Protection of Horizontal Openings in Sidewalks or Other Exterior Areas

Horizontal openings in sidewalks or other areas exterior to the building shall be protected by weather-tight hinged metal doors or vertically lifting covers having a nonslip upper surface. Such doors or covers shall not be used where the hoistway is located inside the building. Doors or covers shall be of sufficient strength to support safely a static load of not less than 300 lb/ft^2 (14.4 kPa) uniformly distributed.

8.1.5 Hinged-Type Swinging Doors

Hinged-type swinging doors shall conform to the following:

(a) The line of the hinges shall be at right angles to the building wall.

(b) The side of the door opening nearest to the building shall be 4 in. (102 mm) or less from the building wall except where a greater distance is approved by the authority having jurisdiction.

(c) There shall be a minimum clearance of 18 in. (457 mm) between the face of the doors and any obstruction when the doors are in the open position.

(d) The doors shall be opened by the ascending car and shall be self-closing as the car descends, and shall be kept in the closed position when the car is not at the top landing.

(e) Stops shall be provided to prevent the doors from opening more than 90 deg from their closed position.

8.1.6 Vertically Lifting Covers

Vertically lifting covers shall conform to the following:

(a) The cover shall be raised and lowered vertically by the ascending and the descending car and shall not be held or fastened in the open position when the car is not at the top landing.

(b) The edge of the cover adjacent to any building wall or other obstruction shall be 4 in. (102 mm) or less from such wall or obstruction, except where a greater distance is approved by the enforcing authority.

(c) There shall be a clearance of not less than 2 ft (610 mm) between the top of the cover and any obstruction vertically above it when the car is at the top of its overtravel.

(d) Recesses or guides, which will securely hold the cover in place on the stanchions, shall be provided in the underside of the cover.

SECTION 8.2
MACHINERY AND EQUIPMENT

8.2.1 General Requirements

Machinery and equipment shall conform to the requirements of Part III, except as modified in this Section.

Copyright © 2009 by the American Society of Mechanical Engineers.
No reproduction may be made of this material without written consent of ASME.

8.2.2 Buffers and Bumpers

Buffers and bumpers shall conform to Section 3.1.

8.2.3 Counterweights

Counterweights shall conform to Section 3.2.

8.2.4 Car Frames and Platforms

Car frames and platforms shall conform to Section 3.3.

8.2.5 Bow-Irons and Stanchions

Where hinged doors or vertically lifting covers are provided at the sidewalk or other area exterior to the building, bow-irons or stanchions shall be provided on the car to operate such doors or covers.

Bow-irons and stanchions shall conform to the following requirements:

(a) They shall be not less than 7 ft (2 134 mm) high, except that this height may be reduced by an amount necessary to permit the doors or covers to close when the car is at the landing next below the top terminal landing.

(b) They shall be so designed, installed, and braced as to withstand the impact when striking the doors or covers.

(c) Bow-irons shall be located approximately symmetrically with respect to the center of the car platform.

(d) Stanchions shall be framed together at their upper ends and provided at the top with buffer springs.

8.2.6 Car Enclosures and Car Doors and Gates

Car enclosures and car doors and gates shall not be less than 6 ft (1 829 mm) high, except that the height of the enclosure and the car doors or gates shall be permitted to be reduced where the height of the bow-iron or stanchions has been reduced as permitted by Section 2.5(a). Car tops are not required.

8.2.7 Car and Counterweight Safeties and Governors

Car and counterweight safeties shall conform to Section 3.5.

Car and counterweight governors, where provided, shall conform to Section 3.6.

8.2.8 Capacity and Loading

Capacity and loading shall conform to 3.7.3 and 3.7.5.

8.2.9 Driving Machines and Sheaves

Driving machines and sheaves shall conform to the requirements of Section 3.8.

8.2.10 Terminal Stopping Devices

Terminal stopping devices shall conform to the requirements of Section 3.9 and the following requirements.

Elevators having their top opening located in the sidewalk or other area exterior to the building shall comply with the following:

(a) Limit switches installed in the hoistway at the lower terminal shall be located as far above the bottom of the pit as practicable.

(b) All terminal limit switches in the hoistway or the car shall have weatherproof enclosures.

8.2.11 Locking Devices for Hinged Swinging Doors or Vertically Lifting Covers in Sidewalks or Other Areas Exterior to the Building

Locks if provided to lock the doors or covers of power elevators in their closed position shall conform to the requirements of 3.4.2.

(a) Electrical contacts or interlocks are not required for power elevators on vertically lifting covers or hinged doors in sidewalks or other areas exterior to the building.

(b) Hoistway doors at all interior openings in basements, and at the top terminal landing in the building wall facing the sidewalk or other exterior area where the hoistway is located inside the building, shall be provided with locking devices conforming to the requirements of Section 2.7.

8.2.12 Requirements for Electrical Wiring and Electrical Equipment

Where the top-terminal-landing opening is in the sidewalk or other area exterior to the building, the following special requirements shall apply:

(a) All electrical wiring shall be in rigid metal conduit; and all electrical outlets, switches, junction boxes, and fittings shall be of a weatherproof type.

(b) Slack-rope switches where required, lower normal terminal and lower final terminal hoistway limit switches, and pit stop switches shall be located as far above the bottom to the pit as practicable.

8.2.13 Clearance Between Loading Side of Car Platforms and Hoistway Enclosures

The clearance between a loading side of the car platform and the hoistway enclosure may exceed that specified in 2.4.1 on the sides where the overhead sheaves are located, provided that in this case clearance shall be not greater than that required for the installation of the sheaves and sheave beams plus running clearance of not more than 1 in. (25 mm).

8.2.14 Operating Devices and Control Equipment of Sidewalk Elevator

Operating devices and control equipment shall conform to the following:

(a) Enclosures of all electrical equipment on the car or in the hoistway shall be of a weatherproof type where the top opening is located in the sidewalk or other area exterior to the building.

Copyright © 2009 by the American Society of Mechanical Engineers.
No reproduction may be made of this material without written consent of ASME.

(b) The operation of power sidewalk elevators through openings in the sidewalk, or through openings in other exterior areas that are accessible to the public, and that are protected by hinged doors or vertically lifting covers, shall conform to the following:

(1) The elevator shall be operated in both the up and down directions through the opening, only from the sidewalk or other exterior area. The operation shall be by means of

(a) key-operated continuous-pressure-type up-and-down switches; or

(b) continuous-pressure-type up-and-down operating buttons on the free end of a detachable, flexible cord 5 ft (1 524 mm) or less in length.

(2) Key-operated switches shall be of continuous-pressure spring return type, and shall be operated by a cylinder-type lock having not less than a five-pin or five-disk combination with the key removable only when the switch is in the "OFF" position.

(3) Key-operated switches and plug receptacles for flexible cords shall be mounted in weatherproof boxes with covers installed above the sidewalk or other area on the side of the building wall, located 18 in. (457 mm) or less horizontally from one side of the opening.

(4) Operating buttons shall be permitted to be provided in the elevator car and at any landing below the top landing, provided that such buttons shall operate the car only when the bow-iron or stanchions are not in contact with the doors or covers in the sidewalk of other exterior area.

(5) When the bow-iron or stanchions are in contact with the doors or covers at the sidewalk or other exterior area, it shall be possible to operate the car only by means of either the key switches or the continuous-pressure-type up-and-down buttons on the free end of the flexible cord specified in 8.2.14(b)(1).

(6) Flexible cords and operating keys shall not be left where they are accessible to unauthorized persons for operation of the elevator.

Copyright © 2009 by the American Society of Mechanical Engineers.
No reproduction may be made of this material without written consent of ASME.

Part IX
Moving Walks

SCOPE

This Part applies to moving walks used to transport passengers.

SECTION 9.1
PROTECTION OF FLOOR OPENINGS

9.1.1 Protection Required

Floor openings for moving walks shall be protected against the passage of flame, heat, and/or smoke in accordance with the provisions requirements of the building code.

SECTION 9.2
PROTECTION OF SUPPORTS AND MACHINE SPACES AGAINST FIRE

9.2.2 Protection Required

The sides and undersides of the moving walk structure and the machinery spaces shall be enclosed in fire-resistive materials. Means shall be permitted to be provided for adequate ventilation of the driving machine and control spaces.

SECTION 9.3
CONSTRUCTION REQUIREMENTS

9.3.1 Angle of Inclination

The angle of inclination from the horizontal shall not exceed 3 deg within 3 ft (914 mm) of the entrance and exits and shall not exceed 12 deg at any point.

9.3.2 Geometry

The width of the moving walk shall be the width of the exposed tread, to the next whole inch.

9.3.3 Balustrades

Balustrades shall be installed on each side of the moving walk.

9.3.3.1 Construction

(a) The balustrade on the tread side shall have no areas or moldings depressed or raised more than 0.25 in. (6.4 mm) from the parent surface. Such areas or moldings shall have all boundary edges beveled or rounded.

(b) The balustrade shall be totally closed, except where the handrail enters the newel base.

(c) Gaps between interior panels shall not be wider than 0.1875 in. (4.8 mm). The edges shall be rounded or beveled.

(d) The width between the balustrade interior panels in the direction of travel shall not change.

9.3.3.2 Use of Glass or Plastic. Glass or plastic panels, if used in the balustrades, shall conform to the requirements of ANSI Z97.1 or 16 CFR Part 1201, except that there shall be no requirement for the panels to be transparent.

9.3.3.3 Skirtless Balustrade. On moving walks where the balustrade covers the edge of the treadway:

(a) the clearance between the top surface of the treadway and the underside of the balustrade shall not exceed 0.25 in. (6.4 mm).

(b) the balustrade shall be vertical and smooth for at least 1 in. (25.4 mm) above the top of the tread.

9.3.3.4 Skirt Panels. Where skirt panels are provided:

(a) the clearance between each side of the treadway and the adjacent skirt panel shall be not more than 0.25 in. (6.4 mm).

(b) the exposed surface of the skirt panels adjacent to the tread shall be smooth.

9.3.3.5 Guards at Ceiling Intersections

(a) On high deck balustrades, a solid guard shall be provided in the intersection of the angle of the outside balustrade deck and ceiling or soffit under the following conditions:

(1) where the clearance between the outside edge of the deck and the ceiling or soffit is 12 in. (305 mm) or less; or

(2) where the projected intersection of the outside deck and the ceiling or soffit is 24 in. (610 mm) or less from the centerline of the handrail.

(b) On low deck balustrades, a solid guard shall be provided to protect the intersection formed by the top of the handrail and the plane of the ceiling or soffit where the centerline of the handrail is 14 in. (356 mm) or less from the ceiling or soffit.

(c) The vertical edge of the guard shall be a minimum of 8 in. (203 mm).

(d) The moving walk side of the vertical face of the guard shall be flush with the face of the wellway.

(e) The exposed edge of the guard shall be rounded and have a minimum width of 0.25 in. (6.4 mm).

Copyright © 2009 by the American Society of Mechanical Engineers.
No reproduction may be made of this material without written consent of ASME.

(f) Guards shall be permitted to be of glass or plastic, provided they meet the requirements of 9.3.3.2.

9.3.3.6 Deck Barricades

(a) A barricade to prevent access to the outer deck on low deck exterior balustrades shall be provided on each moving walk when the exterior deck is greater than 36 in. (915 mm) above the floor in any part of its travel and the exterior deck width exceeds 5 in. (127 mm), and is sloped at 45 deg or less from the treadway. The barricade shall extend to a height which is nominally 4 in. (102 mm) below the top of the handrail.

(b) The barricades shall be located wherever the exterior deck exceeds the 36 in. (915 mm) height above the floor.

9.3.4 Handrails

9.3.4.1 Type Required. Each balustrade shall be provided with a handrail moving in the same direction and at substantially the same speed as the treadway.

9.3.4.2 Guards. Hand or finger guards shall be provided at points where the handrails enter the balustrade.

9.3.5 Pallet-Type Treadway

9.3.5.1 Slotting of Treadway. The treadway surface of each pallet shall be slotted in a direction parallel to its travel.

9.3.5.2 Alignment of Pallet Tread Surfaces. Adjacent ends of pallets shall not vary in elevation more than 0.0625 in. (1.6 mm).

9.3.6 Belt-Type Treadway

Belt-type treadways shall conform to the following:

(a) Splices. Splicing of the treadway belt shall be made in such a manner as to result in a continuous unbroken treadway surface of the same characteristics as the balance of the belt.

(b) Slotting of Treadway. The treadway surface shall be slotted in a direction parallel to its travel for purposes of meshing with combplates at the landings.

9.3.7 Width

The width of a moving walk shall not be less than 22 in. (559 mm).

SECTION 9.4
ENTRANCE AND EGRESS ENDS

9.4.1 Combplates

There shall be a combplate to which combs shall be fastened, at the entrance and at the exit of every moving walk.

The comb teeth shall be meshed with and set into the slots in the tread surfaces so that the points of the teeth are always below the upper surface of the treads.

Combplates shall be adjustable vertically. Sections forming the comb teeth shall be readily replaceable.

9.4.2 Distinction Between Comb and Step

There shall be a visual contrast between the comb and tread achieved by color, pattern, or texture.

9.4.3 Adjacent Floor Surfaces

The adjacent floor surface at each landing shall be continuous with the top of the landing plate with no abrupt change in elevation of more than 0.25 in. (6.4 mm).

SECTION 9.5
DRIVING MACHINE, MOTOR, AND BRAKE

9.5.1 Brakes

9.5.1.1 Moving Walk Driving Machine Brake

(a) Each moving walk driving machine shall be provided with an electrically released and mechanically or magnetically applied brake. If the brake is magnetically applied, a ceramic permanent magnet shall be used. There shall be no intentional time delay designed into the application of the brake.

(b) The brake shall be applied automatically if the electrical power supply is interrupted. The brake shall be capable of stopping the down or horizontal running moving walk with any load up to the brake rated load.

9.5.1.2 Main Drive Shaft Brake. If the moving walk driving machine brake is connected to the main drive shaft by other than a continuous shaft, mechanical coupling, or toothed gear, and the moving walk, with the drive disconnected, is capable of running under gravity with any load up to and including rated load, a mechanically or magnetically applied brake capable of stopping a down running moving walk with brake rated load shall be provided on the main drive shaft or specially attached braking surface attached directly to the treadway. If the brake is magnetically applied, a ceramic permanent magnet shall be used.

SECTION 9.6
OPERATING AND SAFETY DEVICES

9.6.1 General

Operating and safety devices conforming to the requirements of this Section shall be provided. When more than one driving machine per moving walk is utilized, actuation of devices covered by this Section shall simultaneously control all driving machines.

9.6.2 Starting Switch

Starting switches shall be of the key-operated type and shall be located so that the exposed treadway is within sight.

Copyright © 2009 by the American Society of Mechanical Engineers.
No reproduction may be made of this material without written consent of ASME.

9.6.3 Emergency Stop Buttons

(a) A red stop button shall be visibly located at every entrance to and exit from a moving walk on the right side facing the walk. The operation of either of these buttons shall stop the walk. It shall not be possible to start the walk by these buttons. Remote stop buttons are prohibited.

(b) The button shall be identified with the words "EMERGENCY STOP," in letters not less than 0.5 in. (18 mm) high.

9.6.4 Speed Governor

All moving walks, not driven by an alternating current squirrel cage induction motor directly connected to the driving machine, shall be provided with a speed governor that will cause the interruption of power to the machine and brake should the speed of the treadway exceed a predetermined value, not to exceed 20% above maximum designed treadway speed.

9.6.5 Application of an Electrically Released Brake

An electrically released brake shall automatically stop the walk when any of the safety devices required by 9.6.3, 9.6.4, 9.6.7, and 9.6.8 are actuated.

9.6.6 Broken Drive-Chain Switch

Where the driving machine is connected to the main drive shaft by a chain, and where a brake is located on the main drive shaft, a device shall be provided that will cause application of the main drive shaft brake should the drive chain part.

9.6.7 Rolling Shutter Device

Rolling shutters, if used, shall be provided with a device which shall be actuated as the shutters begin to close to cause the opening of the power circuit to the moving walk driving machine motor and brake.

9.6.8 Reversal Stop Device

Means shall be provided to cause the opening of the power circuit to the driving machine motor and brake in case of accidental reversal of travel while an inclined moving walk is operating in the ascending direction.

9.6.9 Tandem Operation

Tandem operation moving walks shall be electrically interlocked where traffic flow is such that bunching will occur if the moving walk carrying passengers away from the intermediate landing stops.

The electrical interlocks shall stop the moving walk carrying passengers into the common intermediate landing if the moving walk carrying passengers away from the landing stops. These moving walks shall also be electrically interlocked to assure that they run in the same direction.

9.6.10 Disconnected Motor Safety Device

If the drive motor is attached to a gear reducer by means other than a continuous shaft, mechanical coupling, or toothed gearing, a device shall be provided that will cause the application of the moving walk brake if the motor becomes disconnected from the gear reducer.

9.6.11 Signs

A caution sign shall be located at each landing of each walk, readily visible to the boarding passengers.

The sign shall include the following wording:

(a) Caution

(b) Passengers Only

(c) Hold Handrail

(d) Attend Children

(e) Avoid Sides

The sign shall be standard for all walks and shall be identical in format, size, color, wording, and pictorials as shown in Fig. 5.3.11.

SECTION 9.7
LIGHTING AND ACCESS

9.7.1 Lighting of Treadway

Treadways shall be illuminated with a light intensity of no less than 5 fc (54 lx). The illumination shall be of uniform intensity and should not contrast materially with that of the surrounding area.

9.7.2 Access to Interior

If access doors are provided in the side of the moving walk enclosure, they shall be locked and the key kept in a location accessible to authorized persons but not to the general public.

The key shall be removable only when in the locked position.

Copyright © 2009 by the American Society of Mechanical Engineers.
No reproduction may be made of this material without written consent of ASME.

Part X
Private Residence Elevators

SCOPE

This Part applies to power elevators that are limited in size, capacity, rise, and speed and are installed in or at a private residence. This Part also applies to similar elevators installed in buildings as a means of access to private residences within such buildings provided the elevators are so installed that they are not accessible to the general public or to other occupants in the building.

NOTE: This Part has been developed to provide a minimum standard of safety for private residence elevators. These elevators are installed for the convenience of those persons who are unable to use stairways. Private residence elevators, while they are usually installed in single-family dwellings, may be installed within a separate apartment in a multiple dwelling where they are not accessible to the general public or to other occupants of the building. It is frequently necessary to install such elevators in open stairwells, as the construction of the building may not provide space for an enclosed hoistway.

Since the size, speed, load, rise, and use are limited, it is possible to provide an adequate level of safety without requiring the equipment to meet the standards in other parts of the Code. Equipment installed for use by the general public is subjected to much more severe and frequent service.

Although private residences are usually exempt from routine inspections, this Code will provide a basis for evaluation of existing equipment during resale or exchange of property. It will also be useful when an "installation placed out of service" is returned to use.

It should be noted that the rules of this Part of the Code do not apply to all power elevators installed in private residences, but only to those that meet the definition for "private residence elevator." All other elevators in private residences are required to comply with all the rules of the other parts of this Code.

SECTION 10.1
HOISTWAY, HOISTWAY ENCLOSURES, AND RELATED CONSTRUCTION

10.1.1 Hoistway Enclosure Construction

The hoistway shall be solidly enclosed throughout its height without grillwork or openings other than for landing or access doors, except that any exterior windows within the hoistway shall be protected by grillwork. Enclosures shall be of sufficient strength to support in true alignment the hoistway doors and gates and their locking equipment. The fire resistance rating shall be in accordance with the requirements of local ordinance.

(a) For rated speeds less than 40 ft/min (0.20 m/s), the hoistway enclosure is not required on the lowest landing served, unless it opens directly into a garage, provided the car platform is equipped with a device that, if the platform is obstructed in its downward travel by a force of 4 lbf (18 N) or more applied anywhere at its lower surface, will open an electric contact in the control circuit and thus stop the downward travel of the car within the range of the free suspension of the car and not exceeding 3 in. (76 mm).

(b) The enclosure is not required in the upper landing on continuous-pressure operation elevators serving only adjacent landings (one-floor travel), provided the floor opening at the upper landing is protected by an enclosure and gate at least 36 in. (914 mm) high with openings that will reject a ball 1 in. (25 mm) in diameter and the gate is provided with a combination mechanical lock and electric contact.

(c) For rated speeds less than 40 ft/min (0.20 m/s), the hoistway enclosure is not required on the upper landing of elevators having continuous-pressure operation and serving only adjacent landings (one-floor travel), where the floor opening is provided with a vertically lifting hatch cover that is automatically raised and lowered vertically by the ascending and descending car, provided this cover meets the following requirements:

(1) it is fitted with guides to ensure its proper seating

(2) it is designed and installed to sustain a total load of 75 lb/ft^2 (3.59 kPa) or 300 lb (136 kg) at any one point

(3) it is equipped with an electric contact that will prevent the upward travel of the car when a force of 20 lbf (89 N) is placed at any point on the tip of the hatch cover

(d) The hoistway enclosure is not required at the upper landing of elevators located in existing open stairway areas or other existing open areas provided that

(1) the car platform is equipped with a device which will meet the requirements of 10.1.1(a) and stop the car if it is obstructed in its downward travel

(2) the entrance sides of the hoistway at the upper landings are protected as required in 10.1.4

(3) the car gate is automatically locked except when the car platform is within 6 in. (152 mm) of a landing

10.1.2 Pits

10.1.2.1 A pit is not required at the bottom of the hoistway. The car shall be permitted to stop immediately on or above the bottom landing floor, or a pit may be

Copyright © 2009 by the American Society of Mechanical Engineers.
No reproduction may be made of this material without written consent of ASME.

provided to permit the car floor to stop flush with the landing floor.

A pit shall not be provided where there is no hoistway enclosure at the lowest floor served.

10.1.2.2 Pit Maintenance. Where a pit is provided, it shall be kept clean and free from dirt and rubbish. The pit shall not be used for storage purposes and shall be maintained free of an accumulation of water.

10.1.2.3 Drains. Drains shall be permitted to be provided in pits. Sumps, with or without pumps, are permitted.

(ED) **10.1.2.4 Pit Guard.** A pit provided in other than a hoistway that is enclosed for its full rise of the car shall be guarded by a railing at least 36 in. (914 mm) high and the entrance shall be provided with a door or gate.

10.1.3 Top Car Clearance

The top car clearance shall be not less than 4 in. (102 mm) plus 1 in. (25 mm) for each 3.33 ft/min (0.017 m/s) of the rated speed in excess of 30 ft/min (0.15 m/s).

10.1.4 Protection of Hoistway Openings

10.1.4.1 Where Required. Where a hoistway enclosure is required, landing openings shall be protected by swinging or sliding doors or gates. Landing openings in solid hoistway enclosures shall be protected the full height by solid swinging or sliding doors. Their fire endurance shall be not less than required by the governing building code (see Section 1.4, Definitions).

10.1.4.2 Clearance Between Hoistway Doors or Gates and Landing Sills and Car Doors or Gates. The clearance between the hoistway doors or gates and the hoistway edge of the landing sill shall not exceed 3 in. (76 mm). The distance between the hoistway face of the landing door or gate and the car door or gate shall not exceed 5 in. (127 mm).

10.1.4.3 Projection of Hoistway Doors or Gates Into the Hoistway. The hoistway face of the hoistway door or gate shall not project into the hoistway beyond the line of the landing sill. No hardware except that required for door-locking and door-operating or signaling devices shall project into the hoistway beyond the line of the landing sill.

10.1.4.4 Locking Devices for Hoistway Doors and Gates. Hoistway doors or gates shall be provided with locking devices.

The locking device shall be either of the following:

(a) of a type that will either prevent car movement unless the door is locked in the closed position.

(b) of a type that will permit the car to start if the door or gate is in the closed position but not locked, provided that the device shall stop the car if the door or gate fails to lock before the car has moved 12 in. (304 mm) away from the landing. The device shall also prevent the opening of the hoistway door or gate unless the car is within 12 in. (304 mm) of the landing.

10.1.4.5 Opening of Hoistway Doors or Gates. Hoistway doors or gates shall be so arranged that it will not be necessary to reach behind any panel, jamb, or sash to operate them.

10.1.4.6 Hangers and Stops for Hoistway Sliding Doors. Means shall be provided to prevent the hangers for hoistway sliding doors from jumping the track. Stops shall be provided for the doors.

10.1.4.7 Access to the Hoistway for Emergency Purposes. Hoistway door unlocking devices shall be permitted to be provided for all hoistway doors and gates, conforming to the requirements of 2.7.3.

10.1.5 Pipes in Hoistways

Pipes conveying steam, gas, or liquids, which if discharged into the hoistway would endanger life, shall not be installed in the hoistway.

10.1.6 Horizontal Car Clearances

10.1.6.1 Between Car and Hoistway Enclosures or Counterweight. There shall be a clearance of not less than 0.75 in. (19 mm) between the car and the hoistway enclosure, and between the car and its counterweight.

10.1.6.2 Between Car and Landing Sill. The clearance between the car platform and the landing sill shall be not less than 0.5 in. (13 mm) nor more than 1.5 in. (38 mm).

10.1.7 Guarding of Suspension Means

10.1.7.1 Suspension Means Passing Through Floors or Stairs. Ropes and chains passing through a floor or stairway outside the hoistway enclosure shall be enclosed with a solid or openwork enclosure, not less than 6 ft (1.83 m) above the floor or stair tread. If of openwork, the enclosure shall reject a ball 0.5 in. (13 mm) in diameter. Means for inspection shall be provided. The floor openings shall not be larger than is necessary to clear the suspension means.

10.1.7.2 Suspension Means Immediately Adjacent to a Stairway. Ropes and chains immediately adjacent to a stairway shall be guarded with solid or openwork panels on the stair side not less than 6 ft (1.83 m) above the stair treads. Openwork panels shall reject a ball 0.5 in. (13 mm) in diameter. Ropes or chains that operate within a guide or track shall be considered suitably guarded.

Copyright © 2009 by the American Society of Mechanical Engineers.
No reproduction may be made of this material without written consent of ASME.

SECTION 10.2
CARS

10.2.1 Car Frames and Platforms

Materials used in construction of car enclosures, frames, and platforms shall conform to the following:

(a) Cars shall have metal or combination metal and wood car frames and platforms having a factor of safety of not less than 5 based on rated load.

(b) Cast iron shall not be used in any member of the car frame or platform other than for guides or guide shoe brackets.

10.2.2 Car Enclosure

10.2.2.1 Car Enclosure Required. Except at entrances, cars shall be enclosed on all sides and on the top. The enclosure shall be constructed of a solid or of openwork material that will reject a ball 0.5 in. (13 mm) in diameter.

10.2.2.2 Securing Enclosures. Car enclosures shall be secured to the platform in such a manner that it cannot work loose or become displaced in normal service.

10.2.2.3 Glass in Elevator Cars. Glass shall be permitted to be used in elevator cars. Glass exceeding 1 ft^2 (0.093 m^2) in area shall

(a) be laminated

(b) meet the requirements for laminated glass of ANSI Z97.1, except as to transparency

(c) be installed and guarded so as to provide adequate protection for passengers in case the glass panels break or are dislodged

(d) be so mounted in the structure that the structure including the glass in place shall withstand the required elevator tests without damage

10.2.3 Number of Compartments

The car shall not have more than one compartment.

10.2.4 Car Doors and Gates

A car door or gate which, when closed, will guard the opening to a height of at least 66 in. (1.68 m) shall be provided at each entrance to the car. Car doors shall be permitted to be of solid or openwork construction which will reject a ball 3 in. (76 mm) in diameter.

Collapsible car gates shall be of a design that, when fully closed (extended position), will reject a ball 3 in. (76 mm) in diameter.

10.2.4.1 Power Operation of Car Doors and Gates. Power operation where used for car doors and gates shall conform to the requirements of Section 2.8.

(ED) **10.2.4.2 Car Door or Gate Locking Devices.** Where the hoistway enclosure is not continuous for the full rise of the car, the car door or gate shall be provided with a mechanical lock that will lock the car door or gate if the car is more than 6 in. (152 mm) away from a landing.

10.2.4.3 Car Door or Gate Electric Contacts. Every car door or gate shall be provided with an electric contact, conforming to the requirements of 3.4.2.

The design of the car door or gate electric contacts shall be such that for a sliding door or gate, the car cannot move unless the door or gate is within 2 in. (51 mm) of the closed position. If the door or gate swings outward to open, the car door or gate must be closed and locked before the car can move.

10.2.5 Light in Car

The car shall be provided with an electric light. The control switch for the light, if provided, shall be located in the car and near the car entrance. The minimum illumination at the car threshold, with the door closed, shall be not less than 5 fc (54 lx).

SECTION 10.3
COUNTERWEIGHTS

10.3.1 General Requirements

Counterweights, where used, shall conform to the following:

(a) They shall run in guide rails.

(b) Where a car counterweight is used, it shall not be of sufficient weight to cause slackening of any rope during acceleration or retardation of the car.

(c) The counterweight sections, whether carried in a frame or not, shall be fastened together and shall also be secured to prevent shifting by an amount that will reduce the clearance between the car and counterweight to less than 0.75 in. (19 mm). The clearance between the counterweight and the hoistway enclosure shall be not less than 0.75 in. (19 mm).

10.3.2 Location and Guarding of Counterweights

10.3.2.1 Counterweight on Cars Operating Through Hatch Covers. If a car operates through a hatch cover, the counterweight runway shall be enclosed throughout its height.

10.3.2.2 Counterweight Coming Down to Floors or Passing Floors or Stairs. Where the counterweight runway comes down to a floor or passes floors or stairs, it shall be guarded to a height of at least 7 ft (2 134 mm) above the floor or the stair treads by a solid or openwork enclosure. Openwork enclosures shall reject a ball 0.5 in. (13 mm) in diameter.

10.3.2.3 Access to Enclosed Counterweights and Ropes. Access shall be provided for inspection, maintenance, and repair of an enclosed counterweight and its ropes. Doors on the counterweight enclosure shall be self-closing and self-locking and openable from the outside only with a suitable key. If the enclosure is of such

Copyright © 2009 by the American Society of Mechanical Engineers.
No reproduction may be made of this material without written consent of ASME.

size that the door can be closed when the enclosure is occupied by a person, the door shall be easily openable from the inside without the use of a key or other instrument. A stop switch conforming to the requirements of 3.10.4(e) shall be located adjacent to and inside the opening and operable without entering the enclosure.

SECTION 10.4
SAFETIES AND GOVERNORS

10.4.1 Safeties Required

Each elevator car suspended by wire ropes or chains shall be provided with a safety capable of stopping and sustaining the car with rated load. Where the space below the hoistway is not permanently secured against access, the counterweight shall be provided with a safety capable of stopping and sustaining the descending counterweight.

10.4.2 Operation of Safeties

The car safety or counterweight safety, if provided, shall be of the inertia or other approved type operated by the breakage of the suspension means or by the action of a speed governor. If of the speed governor type, the governor shall operate the safety at a maximum tripping speed of 175 ft/min (0.88 m/s). On the breakage of the suspension means, the safety shall operate without delay and independently of the speed governor action.

10.4.3 Application of Safeties

The application of any safety specified in this Section shall conform to the requirements of 3.5.4.

10.4.4 Location of Speed Governor

Where a speed governor is used, it shall be located where it cannot be struck by any moving object in normal operation or under conditions of overtravel, and where there is sufficient space for full movement of the governor parts.

10.4.5 Opening of the Brake Circuit on Safety Application

Where a speed governor is used, the motor circuit and the brake circuit shall be opened before or at the time that the safety applies.

10.4.6 Governor Ropes

The governor ropes shall be of iron, steel, monel metal, or phosphor bronze not less than 0.25 in. (6.3 mm) in diameter. Tiller-rope construction shall not be used.

SECTION 10.5
CAR AND COUNTERWEIGHT GUIDE RAILS AND FASTENINGS

10.5.1 Material

Car and counterweight guide rails shall be of steel.

10.5.2 Fastenings, Deflections, and Joints

Guide rails shall be securely fastened, shall not deflect more than 0.25 in. (6 mm) under normal operation, and shall have their joints well-fixed and strongly secured. Guide rails and their joints and fastenings shall withstand without failure the application of the car safety when stopping the car with its rated load.

10.5.3 Extension of Guide Rails at Top and Bottom of Hoistway

Guide rails shall extend from the bottom of the hoistway to a height above the top landing sufficient to prevent the guide shoes from running off the guides when the car or counterweight is at its extreme upper position.

SECTION 10.6
CAR AND COUNTERWEIGHT BUFFERS

10.6.1 Buffers and Buffer Supports

(a) The car and counterweight shall be provided with spring buffers, except as specified in 10.6.1(c). They shall be so designed and installed that they will not be fully compressed when struck by the car with its rated load or by the counterweight traveling at 125% of the rated speed, or at governor tripping speed where a governor-operated safety is used.

(b) Car and counterweight-buffer supports shall be of sufficient strength to withstand without failure the impact resulting from buffer engagement at 125% of the rated speed, or at governor tripping speed where a governor-operated safety is used.

(c) Buffers are not required for elevators installed in a single-family residence where the space below the car and counterweight consists of a nonoccupiable area, provided that the floor below the car and counterweight has sufficient strength to withstand, without a failure, the impact of the car and counterweight descending at rated speed.

SECTION 10.7
DRIVING MACHINES, SHEAVES, AND THEIR SUPPORTS

10.7.1 Overhead Machinery Beams and Supports

10.7.1.1 Securing of Machinery Beams and Types of Supports. All machinery and sheaves shall be so supported and secured as to prevent any part from becoming loose or displaced.

Beams supporting machinery shall be of steel, sound timber, or reinforced concrete.

10.7.1.2 Overhead Beams and Their Supports. Overhead beams and their supports shall be designed for not less than the sum of the following:

(a) The load resting on the beams and their supports, which shall include the complete weight of the machine, sheaves, controller, and any other equipment supported thereon.

Copyright © 2009 by the American Society of Mechanical Engineers.
No reproduction may be made of this material without written consent of ASME.

(b) The sum of the tension on all suspension ropes or chains multiplied by 2.

10.7.2 Material for Sheaves and Drums and Minimum Diameter

(a) Winding drums, traction sheaves, and overhead and deflecting sheaves shall be of cast iron or steel and of a diameter not less than 30 times the diameter of the wire suspension means, except that where 8 × 19 steel ropes or 7 × 19 aircraft cables are used, the required minimum diameter of drums and sheaves shall be permitted to be reduced to 21 times the diameter of the rope.

(b) The rope grooves shall be machined.

(c) The factor of safety, based on the static load (the rated load plus the weight of the car, ropes, counterweights, etc.), to be used in the design of the driving machine and sheaves shall be not less than 8 for wrought iron and steel, and 10 for cast iron and cast steel and other metals.

10.7.3 Fastening of Driving Machines and Sheaves to Underside of Overhead Beams

(a) Overhead driving machine or sheaves shall not be fastened to the underside of the supporting beams, except for idlers or deflecting sheaves including their guards and frames.

(b) Cast iron in tension shall not be used for supporting idler and deflecting sheaves where they are hung beneath the beams.

10.7.4 Factor of Safety for Overhead Beams and Supports

The factor of safety for overhead beams and supports based on ultimate strength of material shall be not less than 5 for steel and not less than 6 for timber and reinforced concrete.

10.7.5 Hydraulic Driving Machine

Direct-plunger hydraulic driving machines shall conform to the requirements of Section 4.3. Roped-hydraulic machines shall be permitted to be used and shall conform to the requirements of Section 4.9.

10.7.6 Screw Machines

Screw machines shall be of the counterweighted type and shall conform to the requirements of this section and to the following:

(a) The rated speed shall not exceed 40 ft/min (0.20 m/s).

(b) A car safety device conforming to Section 10.4 shall be provided unless other means are provided to limit the down speed of the car with rated load to not over 175 ft/min (0.89 m/s) if there is a failure of driving means.

(c) Where belts or chains are used to connect the motor to the driving machines, the following requirements shall be conformed to:

(1) Belts shall be of multiple V-belt type.

(2) Two or more separate chains shall be provided.

(3) The driving means, whether belts or chains, shall have a factor of safety of not less than 10.

(4) The machine brake shall be so located that failure of the driving belt or chain will not prevent it from performing its intended function.

(d) The factor of safety of the screw as a column shall not be less than 3 based on the total weight supported with rated load in the car.

(e) Means shall be provided to maintain the screw in its vertical position in case of excessive overtravel.

(f) Screws shall be of steel and nuts shall be of bronze or other material having an elongation of at least 14% in a length of 2 in. (51 mm).

(g) A vertical casing, closed at the bottom, shall be provided to enclose and protect the screw below the nut.

10.7.7 Rack and Pinion Machine

Rack and pinion machines, where used, shall conform to the requirements of Nonmandatory Appendix D. The rated speed shall not exceed 40 ft/min (0.20 m/s).

10.7.8 Set Screw Fastenings

Set screw fastenings shall not be used in lieu of keys or pins if the connection is subject to torque or tension.

10.7.9 Friction Gearing, Clutch Mechanisms, or Couplings

Friction gearing, clutch mechanisms, or couplings shall not be used for connecting the drum or sheaves to the main-drive gear.

10.7.10 Use of Cast Iron in Gears

Worm gearing having cast iron teeth shall not be used.

10.7.11 Driving-Machine Roller Chains and Sprockets

Driving-machine chains and sprockets shall be of steel and shall conform in all particulars of design and dimensions to ASA B29.1, Precision Power Transmission Roller Chains, Attachments and Sprockets.

10.7.12 Driving-Machine Brakes

Driving machines, except hydraulic driving machines, shall be equipped with electrically released, mechanically applied brakes conforming to the requirements of 3.8.4.

Copyright © 2009 by the American Society of Mechanical Engineers.
No reproduction may be made of this material without written consent of ASME.

10.7.13 Emergency Operation (Manual)

Private residence elevators shall be arranged for manual operation in case of power failure. The manual operating device shall conform to the following requirements:

(a) it shall not be accessible from inside the car

(b) it shall not release the brake

(c) upon removal of the device, the car shall not move

(d) it shall be actuated by mechanical means only

(e) elevators with hydraulic driving machines shall be provided with a manual lowering valve

(f) instructions shall be posted at or near the manual operating device

SECTION 10.8
TERMINAL STOPPING DEVICES

10.8.1 Stopping Devices Required

(a) Upper and lower normal terminal stopping devices operated by the car shall be provided, and shall be set to stop the car at or near the upper and lower terminal landings.

(b) Upper and lower final terminal stopping devices operated by the car to remove power from the motor and the brake shall be provided. They shall be set to stop the car after it travels past the normal terminal stopping device and before an obstruction is struck. A slack-rope switch conforming to the requirements of 3.10.4(a) shall be permitted to be used as the lower final terminal stopping device.

(c) If the driving machine is of the winding drum or sprocket and chain suspension type

(1) a final terminal stopping device operated by the driving machine shall also be provided.

(2) driving machine-operated final terminal stopping devices are not required when a lower final terminal stopping device is used in addition to the slack-rope switch and two independent upper final terminal stopping devices are provided. A separate device shall be used to operate the lower final terminal and one upper final terminal stopping devices. All final terminal stopping and slack-rope devices shall operate independently of one another. The power feed lines to the driving machine and brake shall be opened by one or both of the upper final terminal stopping devices and either the slack rope switch or the lower terminal stopping device, or both.

(3) indirect connections between the final terminal stopping device and the driving machine shall be designed to prevent slippage.

(d) Terminal stopping switches shall conform to the requirements of 3.9.1 and 3.9.2.

10.8.2 Operation of Stopping Devices

The final terminal stopping device shall act to prevent movement of the car in both directions of travel. The normal and final terminal stopping devices shall not control the same switches on the controller unless two or more separate and independent switches are provided, two of which shall be closed to complete the motor and brake circuit in each direction of travel.

SECTION 10.9
OPERATING DEVICES AND CONTROL EQUIPMENT

10.9.1 Type of Operation

The operation of the car shall be by continuous-pressure means or by single-automatic means.

10.9.2 Control and Operating Circuit Requirements

The design and installation of the operating circuits shall conform to the following:

(a) Control systems that depend on the completion of an electric circuit shall not be used for

(1) interruption of the power and the application of the brake at the terminals

(2) stopping of the car when the emergency stop switch in the car is opened or when any of the electrical protective devices operate

(3) stopping the machine when the safety applies

(b) If springs are used to actuate switches, contactors, or relays to break the circuit to stop a car at a terminal, they shall be of the restrained compression type.

(c) The failure of any single magnetically operated switch, relay, or contactor to release in its intended manner, or the occurrence of a single accidental ground, shall not permit the car to start if any hoistway door or car door or gate is not in the closed position.

10.9.3 Key-Operated Switches

Any car exterior to a residence shall be operated by means of a key switch. Key-operated switches shall be of continuous-pressure spring return type, and shall be operated by a cylinder type lock having not less than a five-pin or five-disk combination with the key removable only when the switch is in the "OFF" position.

10.9.5 Phase Reversal and Failure Protection

If polyphase alternating-current power supply is used, protection shall be provided in conformance with the requirements of 3.10.6.

Copyright © 2009 by the American Society of Mechanical Engineers.
No reproduction may be made of this material without written consent of ASME.

10.9.6 Emergency Stop Switch

An emergency stop switch, conforming to the requirements of 3.10.4(u), shall be provided in every car.

10.9.7 Slack-Rope and Slack-Chain Devices for Winding Drum and Roller-Chain-Type Driving Machines

Winding drum machines with rope suspension shall be provided with a slack-rope device of the manually reset type that will remove power from the motor and brake if the car is obstructed in its descent and the hoisting ropes slacken.

Elevators with roller-chain suspension shall be provided with a slack-chain device which will remove power from the motor and brake if the car is obstructed in its descent and the suspension means slacken. This device need not be of the manually reset type if the chain sprockets are guarded to prevent the chain from becoming disengaged from the sprockets.

SECTION 10.10
EMERGENCY SIGNAL DEVICES

10.10.1 Emergency Signal

A telephone connected to a central telephone exchange shall be installed in the car and an emergency signalling device operable from inside the car and audible outside the hoistway shall be provided.

SECTION 10.11
LIMITATION OF LOAD, SPEED, AND RISE

10.11.1 Capacity

The rated load shall not exceed 750 lb (340 kg) and maximum inside net platform area shall not exceed 12 ft^2 (1.1 m^2). The minimum rated load shall be not less than that based on 40 lb/ft^2 (1.91 kPa) or inside net platform area or 350 lb (159 kg), whichever is greater.

10.11.2 Speed

The rated speed shall not exceed 50 ft/min (0.25 m/s).

10.11.3 Rise

The rise shall not exceed 50 ft (15.2 m).

SECTION 10.12
MARKING PLATES

10.12.1 Capacity Plate

A capacity plate indicating the rated load of the elevator in pounds shall be furnished by the manufacturer and fastened in a conspicuous place inside the car. The letters and figures on such plates shall be not less than 0.25 in. (6.3 mm) in height.

SECTION 10.13
SUSPENSION MEANS

10.13.1 Types Permitted

Suspension means shall be not less than two wire ropes or two steel roller-type chains.

10.13.2 Suspension Ropes

On elevators having a rated load of 500 lb (227 kg) or less and operating at a rated speed of 30 ft/min (0.15 m/s) or less, suspension ropes shall be not less than 0.25 in. (6.3 mm) in diameter. Where the rated load exceeds 500 lb (227 kg) or the rated speed exceeds 30 ft/min (0.15 m/s), the ropes shall be not less than 0.375 in. (9.5 mm) in diameter.

10.13.3 Factor of Safety of Suspension Means

The factor of safety of the suspension means shall be not less than 7 based on the manufacturer's rated breaking strength.

When the car and counterweight are suspended by steel ropes and the driving means is an endless steel roller-type chain, the factor of safety of such chain with the rated load in the car shall be not less than 8 based on the ultimate tensile strength.

10.13.4 Arc of Contact of Suspension Means on Sheaves and Sprockets

The arc of contact of a wire rope on a traction sheave shall be sufficient to produce traction under all load conditions up to rated load. The arc of contact of a chain with a driving sprocket shall be not less than 140 deg.

10.13.5 Spare Rope Turns on Winding Drums

The spare rope turns on winding drums shall conform to the requirements of 3.12.7.

10.13.6 Securing of Wire Suspension Ropes to Winding Drums

The securing of wire suspension ropes to winding drums shall conform to the requirements of 3.12.6 or by properly attached fittings as recommended by wire rope manufacturers.

10.13.7 Splicing and Replacement of Suspension Ropes

Splicing and replacement of suspension ropes shall conform to the requirements of Section 3.12.

Copyright © 2009 by the American Society of Mechanical Engineers.
No reproduction may be made of this material without written consent of ASME.

10.13.8 Fastening of Wire Rope Suspension Means to the Car or to the Counterweight

The fastening of a wire rope suspension means to a car or to a counterweight shall conform to the requirements of 3.12.8 or by properly attached fittings as recommended by wire rope manufacturers.

10.13.9 Replacement of Chains and Sprockets

If chains are used as a suspension means and a worn chain is replaced, all chains must be replaced. If a chain sprocket is replaced due to wear, all sprockets must be replaced.

Copyright © 2009 by the American Society of Mechanical Engineers.
No reproduction may be made of this material without written consent of ASME.

NONMANDATORY APPENDIX A
DISTANCES BETWEEN HOISTWAY DOORS AND CAR DOORS OR GATES

Fig. A-1 Distance Between Swinging Hoistway Doors and Car Doors and Gates

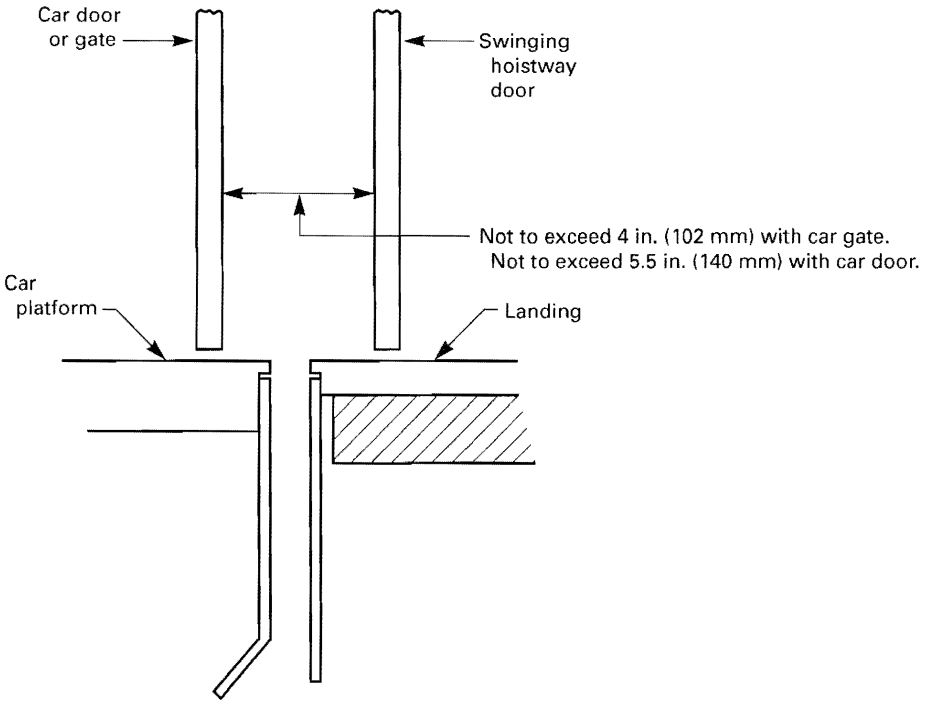

GENERAL NOTE: Space guards shall be permitted to be applied to car doors and/or hoistway doors as necessary to reduce existing distances to meet the requirements of 3.4.3.

Copyright © 2009 by the American Society of Mechanical Engineers.
No reproduction may be made of this material without written consent of ASME.

Fig. A-2 Distance Between Sliding Hoistway Doors and Car Doors and Gates

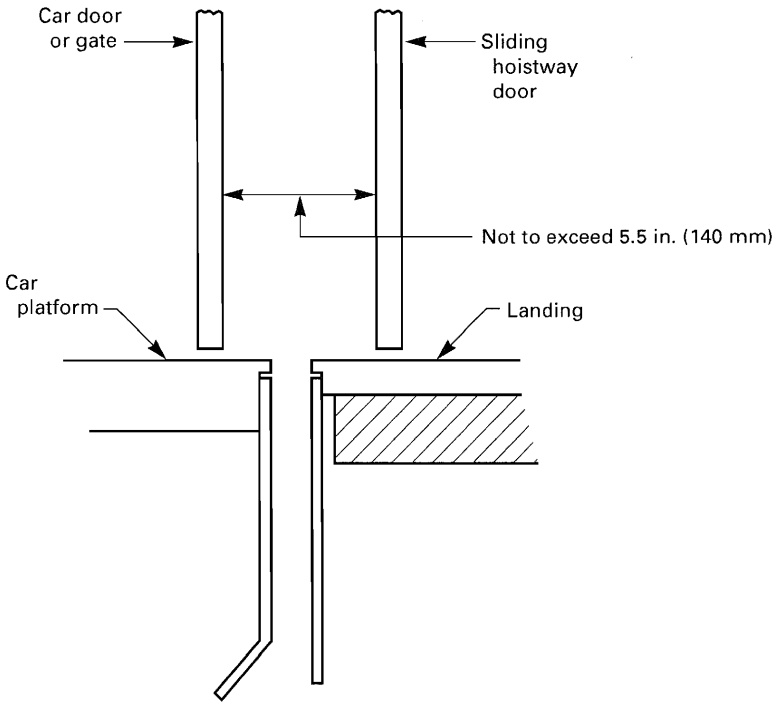

GENERAL NOTE: Space guards shall be permitted to be applied to car doors and/or hoistway doors as necessary to reduce existing distances to meet the requirements of 3.4.3.

Copyright © 2009 by the American Society of Mechanical Engineers.
No reproduction may be made of this material without written consent of ASME.

Fig. A-3 Typical Sliding Hoistway Door Space Guard and Sight Guard (08)

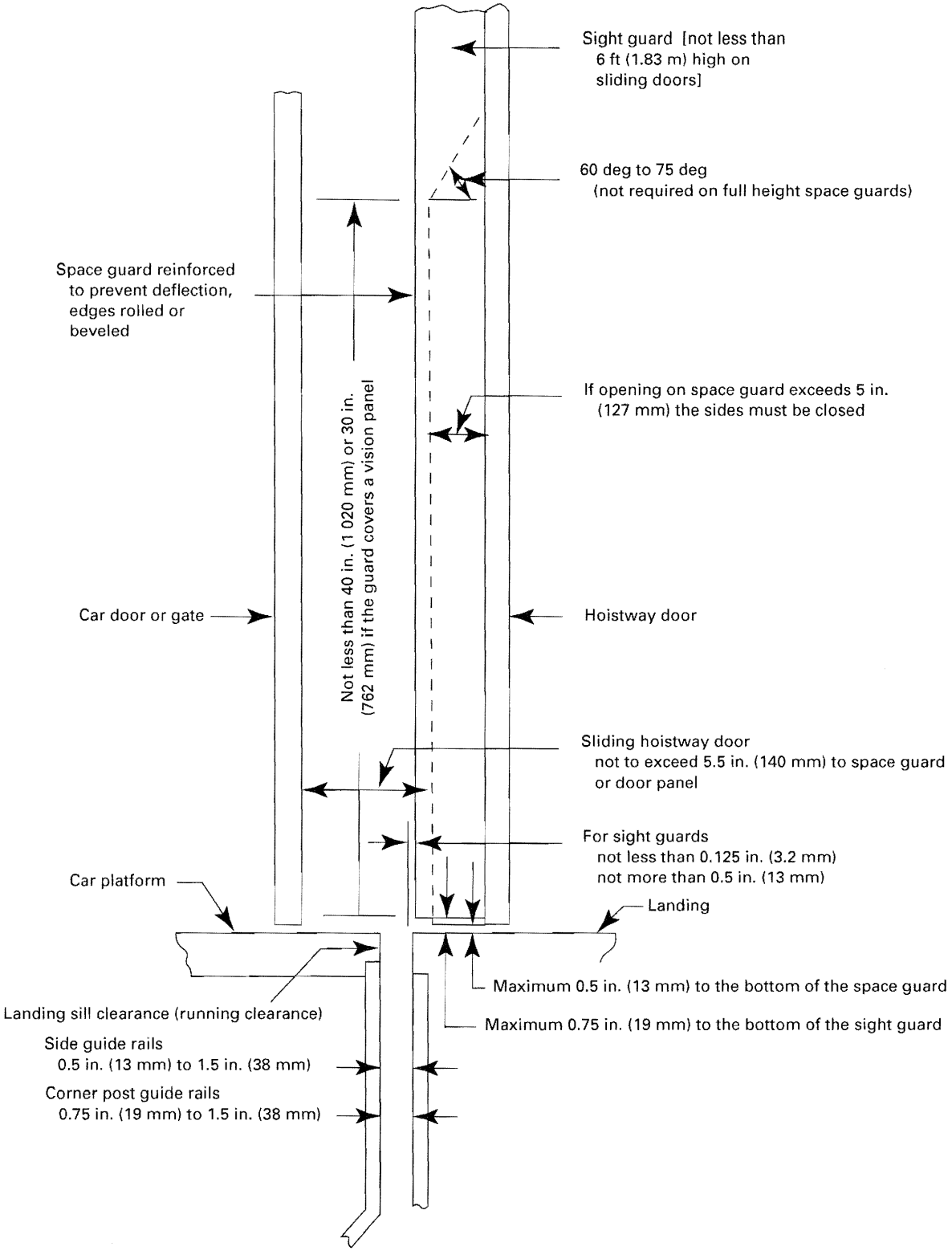

Copyright © 2009 by the American Society of Mechanical Engineers.
No reproduction may be made of this material without written consent of ASME.

(08)

Fig. A-4 Typical Swinging Hoistway Door Space Guards

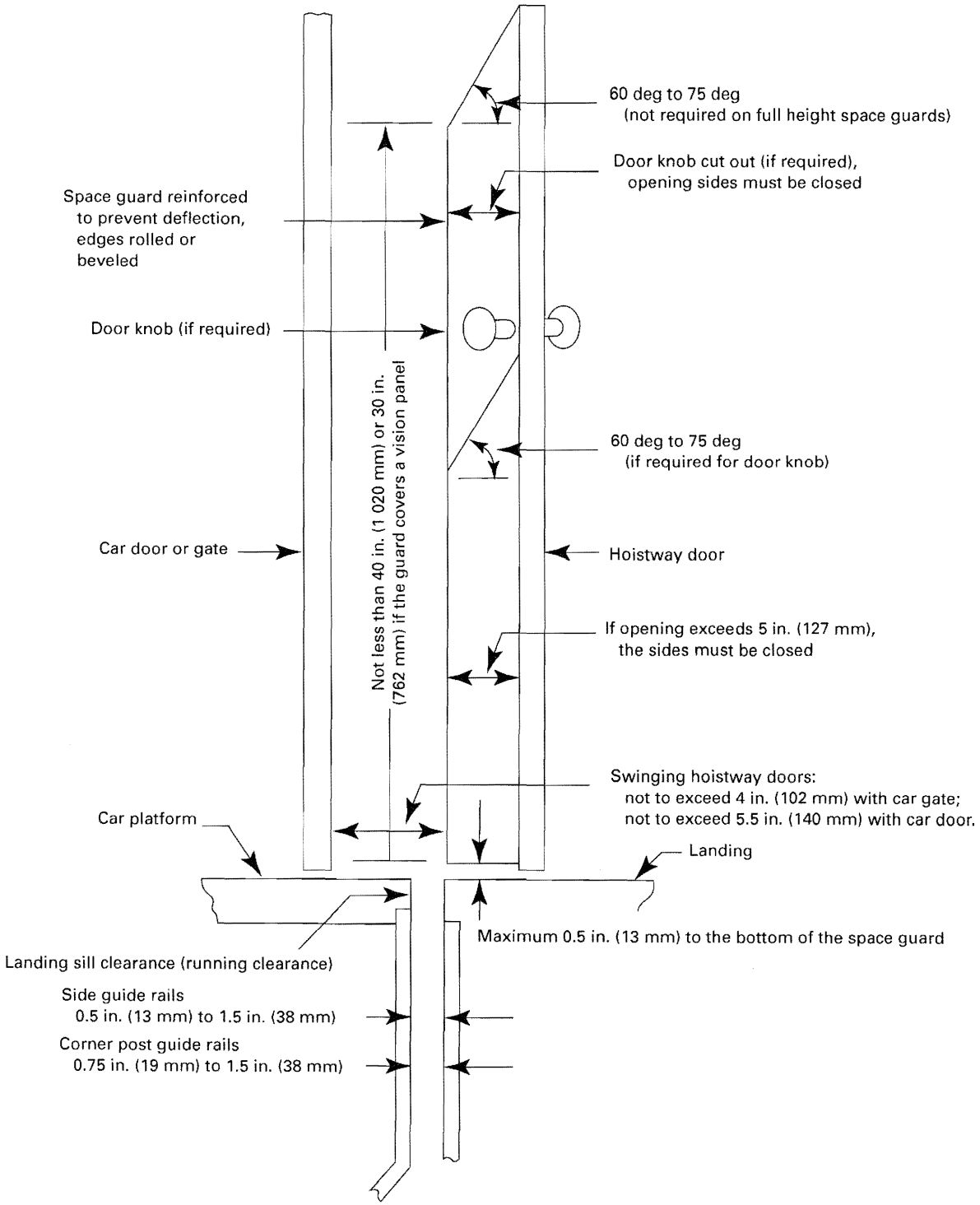

Copyright © 2009 by the American Society of Mechanical Engineers.
No reproduction may be made of this material without written consent of ASME.

Fig. A-5 Typical Space Guard for Swinging Doors With Cutout for Door Knob, Handle, or Pull Bar (08)

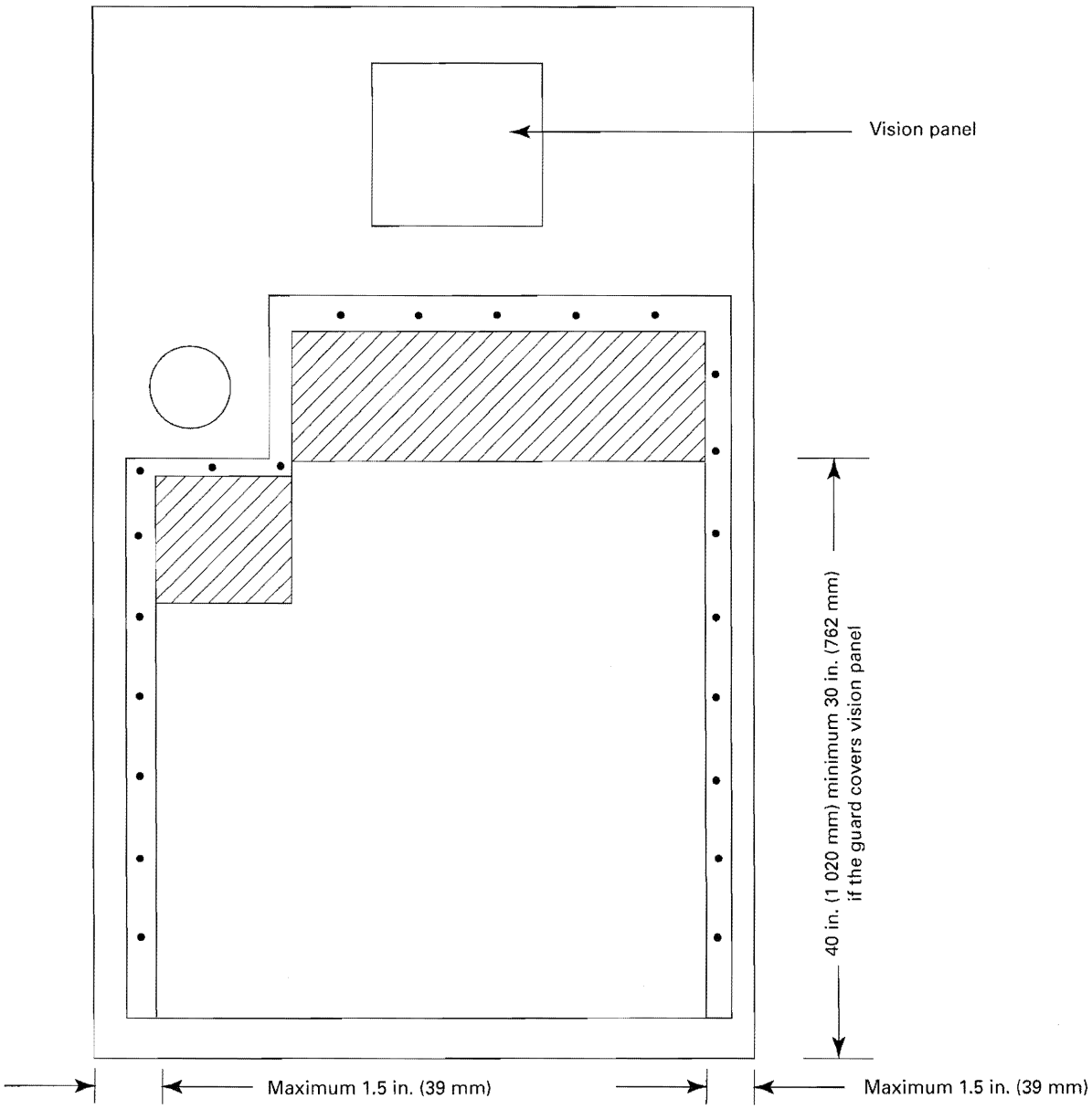

Copyright © 2009 by the American Society of Mechanical Engineers.
No reproduction may be made of this material without written consent of ASME.

NONMANDATORY APPENDIX B
TYPES OF ROPED-HYDRAULIC ELEVATORS

Fig. B-1 Pusher-Type Roped-Hydraulic Elevators

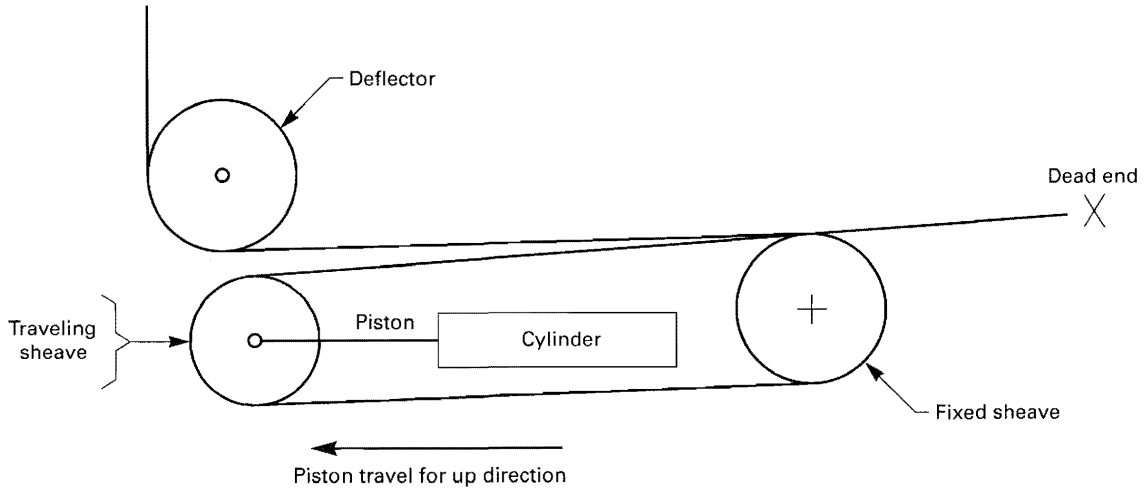

Fig. B-2 Puller-Type Roped-Hydraulic Elevators

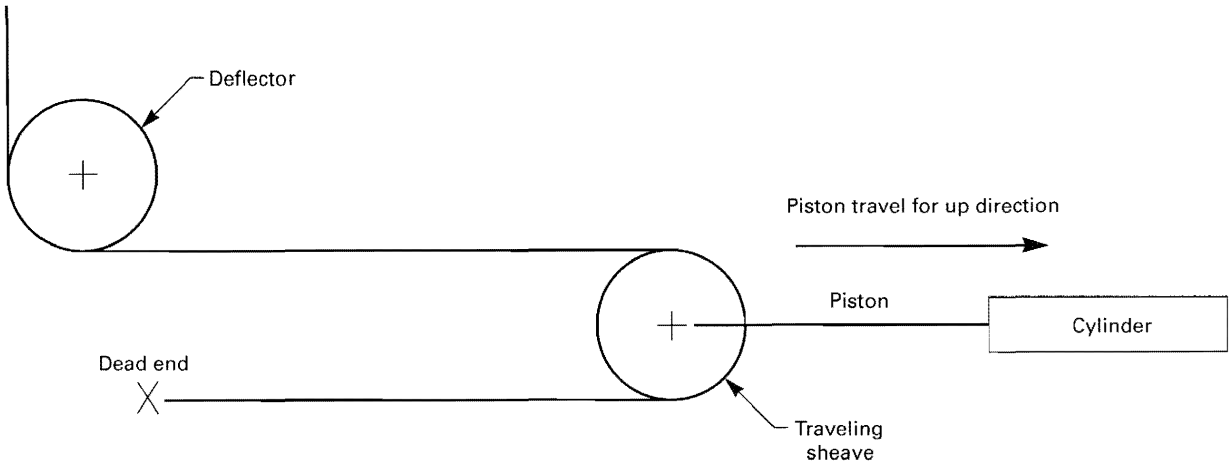

Copyright © 2009 by the American Society of Mechanical Engineers.
No reproduction may be made of this material without written consent of ASME.

NONMANDATORY APPENDIX C
A17.1–1987, Rules 211.3–211.8
(See 3.11.3)

Rule 211.3 Firefighters' Service — Automatic Elevators

All automatic (nondesignated attendant) operation elevators having a travel of 25 ft (7.62 m) or more above or below the designated level shall conform to the requirements of this Rule.

211.3a Phase I Emergency Recall Operation. A three-position ("ON," "OFF," and "BYPASS") key-operated switch shall be provided only at the designated level for each single elevator or for each group of elevators. The key shall be removable only in the "ON" and "OFF" positions.

When the switch is in the "OFF" position, normal elevator service shall be provided and the smoke detectors required by Rule 211.3b shall be functional.

When the switch is in the "BYPASS" position, normal elevator service shall be restored independent of the smoke detector required by Rule 211.3b.

When the switch is in the "ON" position:

(1) All cars controlled by this switch which are on automatic service shall return nonstop to the designated level and power-operated doors shall open and remain open.

(2) A car traveling away from the designated level shall reverse at or before the next available floor without opening its doors.

(3) A car stopped at a landing shall have the in-car emergency stop switch, where required by Rule 210.2(e), rendered inoperative as soon as the door is closed, and the car starts toward the designated level. A moving car, traveling to or away from the designated level, shall have the in-car emergency stop switch rendered inoperative immediately. Once the in-car emergency stop switch, where required by Rule 210.2(e), has been rendered inoperative, it shall remain inoperative while the car is on Phase I emergency recall operation. All other emergency stop switches shall remain operative.

(4) A car standing at a floor other than the designated level, with the doors open and the in-car emergency stop switch, where required by Rule 210.2(e), in the run position, shall conform to the following.

(a) Elevators having automatic power-operated horizontally sliding doors shall close the doors without delay and proceed to the designated level.

(b) Elevators having power-operated vertically sliding doors provided with automatic or momentary pressure closing operation per Rule 112.3d shall have the closing sequence initiated without delay in accordance with Rule 112.3d(1), (2), (3), and (5), and the car shall proceed to the designated level.

(c) Elevators having power-operated doors provided with continuous pressure closing operation per Rule 112.3b or elevators having manual doors shall, when the doors are closed, conform to the requirements of Rule 211.3a. Sequence operation, if provided, shall remain effective.

(5) Door reopening devices for power-operated doors which are sensitive to smoke or flame shall be rendered inoperative. Mechanically actuated door reopening devices not sensitive to smoke or flame shall remain operative. Door closing for power-operated doors shall conform to the requirements of Rule 112.5.

(6) All car and corridor call buttons and all corridor door opening buttons shall be rendered inoperative. All call registered lights and directional lanterns shall be extinguished and remain inoperative. Position indicators, where provided, shall remain in service.

(7) All cars shall be provided with a visual and audible signal system which shall be activated to alert the passengers that the car is returning nonstop to the designated level. The signal shall remain activated until the car has returned to the designated level.

(8) A car stopped at a landing shall have the door open button rendered inoperative as soon as the door is closed and the car starts toward the designated level. A moving car traveling to or away from the designated level shall have the door open button rendered inoperative immediately. Once the door open button has been rendered inoperative, it shall remain inoperative until the car has returned to the designated or alternate level.

211.3b Smoke Detectors. Smoke detectors shall be installed in each elevator lobby at each floor and associated machine room in accordance with NFPA No. 72E, Chapter 4. Smoke detectors are not required in elevator lobbies at unenclosed landings. The activation of a smoke detector in any elevator lobby or associated elevator machine room, other than at the designated level, shall cause all cars in all groups that serve that lobby to return nonstop to the designated level. The operation shall conform to the requirements of Rule 211.3a.

Copyright © 2009 by the American Society of Mechanical Engineers.
No reproduction may be made of this material without written consent of ASME.

No device, other than the Phase I switch (Rule 211.3a) or the detectors in the elevator lobby or associated machine room, shall initiate Phase I operation.

If the smoke detector at the designated level is activated, the cars shall return to an alternate level approved by the enforcing authority, unless the Phase I switch (Rule 211.3a) is in the "ON" position.

Smoke detector activation shall only be reset manually.

211.3c Phase II Emergency In-Car Operation. A three-position ("OFF," "HOLD," and "ON," in that order) key-operated switch shall be provided in or adjacent to an operating panel in each car. It shall become effective only when the designated level Phase I switch (Rule 211.3a) is in the "ON" position or a smoke detector (Rule 211.3b) has been activated, and the car has returned to the designated or alternate level by Phase I operation.

The key shall be removable in each position. The "OFF," "HOLD," and "ON" positions shall not change the operation until the car is at a floor with the doors fully opened.

(1) When in the "ON" position, it shall place the elevator on Phase II emergency in-car operation, for use by trained emergency service personnel only, and the elevator shall operate as follows.

(a) The elevator shall be operable only by a person in the car.

(b) All corridor call buttons and directional lanterns shall remain inoperative.

(c) The opening of power-operated doors shall be controlled only by continuous pressure door open buttons. If the button is released prior to the doors reaching the fully open position, the doors shall automatically reclose.

(d) Open power-operated doors shall be closed by continuous pressure on a door close button.

(e) Door reopening devices rendered inoperative per Rule 211.3a(5) shall remain inoperative. Corridor door closing buttons, if provided, shall remain operative.

(f) Every car shall be provided with a call cancel button, which shall be effective during Phase II emergency in-car operation. When activated, all registered calls shall be cancelled and traveling car shall stop at or before the next available floor.

(g) Floor selection buttons shall be provided in the car to permit travel to all floors served by the car. Means which prevent the operation of these buttons shall be rendered inoperative.

(2) When the switch is in the "HOLD" position, the car shall remain at the floor with its doors open, and door close buttons shall be inoperative.

(3) When the switch is in the "OFF" position, the elevator is not at the designated or alternate level, and Phase I operation is in effect:

(a) The car shall operate in accordance with Rules 211.3a(4) and (5).

(b) The car shall return nonstop to the designated or alternate level and power-operated doors shall open.

(4) Elevators shall be removed from Phase II operation only by moving the emergency key-operated switch in the car to the "OFF" position with the car at the designated or alternate level.

211.3d Switch Keys. The switches required by Rules 211.3a and 211.3c shall be operable by the same key but which is not part of a building master key system. There shall be a key for the designated level switch and for each elevator in the group. These keys shall be kept on the premises in a location readily accessible to authorized personnel, but not where they are available to the public.

NOTE (Rule 211.3d): Local authorities may specify a uniform key or key security for their jurisdiction.

211.3e Interruption of Power. Upon the resumption of power (normal or standby), the car may move to reestablish absolute car position.

211.3f Multideck Elevators. Multideck elevators shall also conform to the following requirements.

(1) The Phase I switch (Rule 211.3a) shall be located at the designated level served by the upper deck.

(2) The Phase II switch (Rule 211.3c) shall be located in the upper compartment. The elevator shall be provided with a means for placing the lower deck out of service, located in that deck or adjacent to the entrance at the lower lobby floor.

Rule 211.4 Firefighters' Service — Designated Attendant Operated Elevators

All elevators having a travel of 25 ft (7.62 m) or more above or below the designated level which are operable only by a designated attendant in the car shall be provided with a visual and audible signal system to alert the attendant to close the doors and return nonstop to the designated level. The signal system shall be activated when the Phase I switch (Rule 211.3a) is in the "ON" position or when a smoke detector (Rule 211.3b) has been activated.

Rule 211.5 Firefighters' Service — Elevators Arranged for Dual Operation

(a) When on without-designated-attendant operation, elevators shall conform to the requirements of Rule 211.3a.

(b) When operated by a designated attendant in the car, elevators parked at a floor shall conform to the requirements of Rule 211.4 for a period of not less than 15 sec nor more than 60 sec. At the completion of the time delay, elevators shall conform to Rule 211.3a.

Copyright © 2009 by the American Society of Mechanical Engineers.
No reproduction may be made of this material without written consent of ASME.

(c) Elevators with any special operation designated as hospital service shall conform to the requirements of Rule 211.4.

Rule 211.6 Firefighters' Service — Inspection Operation

When an elevator which is provided with firefighters' service is on inspection operation, a continuous audible signal which is audible on top of the car shall sound when the Phase I switch (Rule 211.3a) is in the "ON" position or when the smoke detector (Rule 211.3b) is activated to alert the operator of an emergency. Car shall remain under the control of the operator until returned to service.

Rule 211.7 Firefighters' Service Operating Procedures

Instructions for operation of elevators under Phase I shall be incorporated with or adjacent to the Phase I switch at the designated level. Instructions for operation of elevators under Phase II shall be incorporated with or adjacent to the switch, in or adjacent to the operating panel in each car.

Instructions shall be in letters not less than $\frac{1}{8}$ in. (3.2 mm) in height and shall be permanently installed and protected against removal or defacement.

Rule 211.8 Standby (Emergency) Power

When standby (emergency) power is furnished (Rule 211.2), a manual elevator standby power selection switch shall be provided at the designated level to override any automatic sequence operation.

If the manual elevator standby power selection switch is of the key-operated type, the switch keys shall conform to the requirements of Rule 211.3d (also see Rule 211.3e).

Copyright © 2009 by the American Society of Mechanical Engineers.
No reproduction may be made of this material without written consent of ASME.

NONMANDATORY APPENDIX D
RACK AND PINION MACHINES
(A17.1–1987, Rules 208.3–208.9d, and Rule 1200.4e)

INTRODUCTION

Rack and pinion-type drives shall conform to the requirements of Section 208, except Rules 208.1, 208.2, and 208.10, and shall conform to the following:

(a) The rack and pinion drive shall consist of one or more power-driven rotating pinions mounted on the car and arranged to travel on a stationary rack mounted on the supporting structure. The drive shall have at least one pinion, one rack, and two backup rollers, which shall act on the same section of the rack as the drive pinion. Driving machines utilizing a two-sided rack, where two drive pinions are located so that they are opposite each other and act as backup rollers, shall be deemed to have met this requirement.

(b) The pinions and racks shall be of steel or of material having equivalent mechanical properties or better with a minimum factor of safety of 8 based on ultimate stress for the pinion and the rack. They shall be designed to conform to AGMA Standard 218.01, including surface hardening and an assumption of a minimum of 200,000 life cycles.

(c) All moving parts of the driving machine shall be properly protected with solid or perforated metal that will reject a ball of $\frac{1}{2}$ in. (13 mm) in diameter and shall be securely fastened.

(d) The rack and pinion shall be so designed that the separation of the pinion from the rack in all directions in excess of 25% of the tooth depth or $\frac{1}{4}$ in. (6.4 mm), whichever is the lesser, cannot occur. A guard shall be provided to prevent foreign material from lodging between the teeth, and clearance between the moving parts and the guard shall not exceed $\frac{3}{16}$ in. (4.8 mm).

(e) Rack sections shall be fastened to the supporting structure with a factor of safety of 5 based on ultimate stress, and with dowels at each joint.

(f) The manufacturer shall provide the measurement for checking tooth wear on pinion and rack. The measuring instruction shall be indicated on a metal plate securely fastened and conspicuously displayed in the car with letters not less than $\frac{1}{8}$ in. (3.2 mm) high.

SECTION 208
DRIVING MACHINES AND SHEAVES

Rule 208.3 Factor of Safety for Driving Machines and Sheaves

The factor of safety, based on the ultimate strength of the material, to be used in the design of driving machines and in the design of sheaves used with suspension and compensating ropes, shall be not less than:

(a) 8 for steel, bronze, or for other metals having an elongation of at least 14% in a length of 2 in. (51 mm);

(b) 10 for cast iron, or for other metals having an elongation of less than 14% in a length of 2 in. (51 mm).

The load to be used in determining the factor of safety shall be the resultant of the maximum tensions in the ropes leading from the sheave or drum with elevator at rest and with rated load in the car.

Rule 208.4 Fasteners Transmitting Load

Set screws or threaded portions located in the shear plane of bolts and screws shall not be used to transmit load.

Means shall be provided to ensure that there is no relative motion between rigidly joined components transmitting load.

Where flexible couplings are used to transmit load, means shall be provided to prevent disengagement of the coupling components in the event of failure or excessive motion in the flexible connection.

The factors of safety to be used in the design of fasteners transmitting load in driving machines and sheaves shall be not less than those specified in Rule 208.3.

Rule 208.5 Shaft Fillets and Keys

A fillet shall be provided at any point of change in the diameter of driving-machine shafts and sheave shafts to prevent excessive stress concentrations in the shafts.

Shafts which support drums, sheaves, gears, couplings, and other members, and which transmit torque, shall be provided with tight-fitting keys.

Rule 208.6 Cast-Iron Worms and Worm Gears

Worms and worm gears made of cast iron shall not be used in elevator driving machines.

Copyright © 2009 by the American Society of Mechanical Engineers.
No reproduction may be made of this material without written consent of ASME.

Rule 208.7 Friction Gearing and Clutches

Friction gearing or a clutch mechanism shall not be used to connect a driving-machine drum or sheave to the main driving mechanism.

Rule 208.8 Driving-Machine Brakes

The elevator driving machine shall be equipped with a friction brake applied by a spring or springs, or by gravity, and released electrically.

The brake shall be designed to have a capacity sufficient to hold the car at rest with its rated load. (See also 3.8.4.)

Rule 208.9 Indirect-Drive Machines

208.9a Belt and Chain Drives. Indirect-drive machines, utilizing V-belt drives, tooth drive belts, or drive chains, shall include not less than three belts and chains operating together in parallel as a set. Belt and chain drive sets shall be preloaded and matched for length in sets.

208.9b General Requirements. Belt sets shall be selected on the basis of the manufacturer's rated breaking strength and a factor of safety of 10. Chain and sprocket sets shall be selected on the basis of recommendations set forth in the Supplementary Information section of ANSI B29.1, using a service factor of 2.0. Offset links in chain are not permitted.

Sprockets in a chain drive set and also a driven set shall be assembled onto a common hub, with teeth cut in-line after assembly to assure equal load distribution on all chains. Teeth sheaves for a belt drive shall be constructed in a manner to assure equal load distribution on each belt in the set.

Load determination for both the belt and chain sets shall be based on the maximum static loading on the elevator car, which is the full load in the car at rest and at a position in the hoistway which creates the greatest load, including either the car or counterweight resting on its buffer.

Chain drives and belt drives shall be guarded to protect against accidental contact and to prevent foreign objects from interfering with drives.

208.9c Monitoring and Brake Location. Each belt or chain in a set shall be continuously monitored by a broken belt or chain device which shall function to automatically interrupt power to the machine and apply the brake in the event any belt or chain in the set breaks or becomes excessively slack. The driving machine brake shall be located on the traction sheave or drum assembly side of the driving machine so as to be fully effective in the event the entire belt set or chain set should break.

208.9d Replacement of Belts or Chains. See Rule 1200.4e.

1200.4e Belts and Chains. If one belt or chain of a set is worn, stretched, or damaged so as to require replacement, the entire set shall be replaced. Sprockets and toothed sheaves shall also be replaced if worn.

Copyright © 2009 by the American Society of Mechanical Engineers.
No reproduction may be made of this material without written consent of ASME.

(08)

INDEX

References given are to the Part, Section, and Paragraph designations

Absorption of regenerated power, 3.10.10
Access switch, hoistway (*see* Hoistway, access to)
Access to hoistway, 2.7.4
Access to machine room, 2.2.2
Access to pit, 2.3.1
Alteration, 1.5
  definition of, Section 1.4
Amusement device, 1.1.2
Annunciator
  definition of, Section 1.4
Anticreep leveling device, 4.7.3
Antislide device, 5.1.4
Application and release of safety, 3.5.4
Application of Code, 1.2
Applied frame entrance
  definition of, Section 1.4
Apron, car, 3.3.2
Approved
  definition of, Section 1.4
Astragal, hoistway door, 2.6.5
Authority having jurisdiction
  definition of, Section 1.4
Authorized person
  definition of, Section 1.4
Automatic stop valve, 4.4.3
Automatic transfer device
  definition of, Section 1.4
Auxiliary rope fastening device, 3.12.9

Baggage stop, 5.1.4
Balustrade
  escalator, 5.1.1
  moving walk, 9.3.3
Belt, electric elevator driving machine, 3.8.3
Belt-type treadway, moving walk, 9.3.5.3
Bottom car clearance (*see* Clearance, bottom car)
Bottom car runby (*see* Runby, bottom car)
Bottom counterweight runby (*see* Runby, bottom counterweight)
Bow iron
  sidewalk elevator, 8.2.5
Brake
  hand elevator, 7.4.1
  electric elevator, 3.8.4
  escalator, 5.2
  moving walk, 9.5.1
Brake, application of
  electric elevator, 3.10.8
  escalator, 5.3.5
  moving walk, 9.6.5
Broken drive-chain device
  escalator, 5.3.6
  moving walk, 9.6.6
Broken rope, tape, or chain switch, 3.10.4
Broken step-chain device, 5.3.4
Buffer (*also see* Bumper)
  definition of, Section 1.4
  dumbwaiter, electric, 6.2.1
  dumbwaiter, hydraulic, 6.3.1
  electric elevator, 3.1
  hand elevator, 7.2.1
  sidewalk elevator, 8.2.2
  hydraulic elevator, 4.2.1
Buffer switch, 3.10.4
Building code
  definition of, Section 1.4
Bumper (*see also* Buffer)
  definition of, Section 1.4
  dumbwaiter, electric, 6.2.1
  dumbwaiter, hydraulic, 6.3.1
  electric elevator, 3.1
  hand elevator, 7.2.1
  hydraulic elevator, 4.2.1
  sidewalk elevator, 8.2.2

Cable (*see* Rope)
Capacity
  definition of, Section 1.4
  dumbwaiter, 6.2.9
  electric elevator, 3.7
  hand elevator, 7.3.2
  hydraulic elevator, 4.2.4
  sidewalk elevator, 8.2.8
Capacity plate
  dumbwaiter, 6.2.9.2
  electric elevator, 3.7.4
  hand elevator, 7.4.8
Car clearance, bottom (*see* Clearance, bottom car)
Car clearance, horizontal (*see* Clearance, horizontal car)
Car door (*see* Car door or gate)
Car door or gate
  dumbwaiter, 6.2.4

Copyright © 2009 by the American Society of Mechanical Engineers.
No reproduction may be made of this material without written consent of ASME.

electric elevator, 3.4.2
sidewalk elevator, 8.2.7
Car door or gate, location of, 3.4.3
Car door or gate electric contact
definition of, Section 1.4
Car door or gate power closer
definition of, Section 1.4
Car, elevator
definition of, Section 1.4
Car, enclosure
definition of, Section 1.4
dumbwaiter, 6.1
electric elevator, 3.4
hand elevator, 7.2.4
hydraulic elevator, 4.2.3
sidewalk elevator, 8.2.6
Car frame
definition of, Section 1.4
dumbwaiter, 6.2.2
elevator, 3.3
hand elevator, 7.2.3
hydraulic elevator, 4.2.2
sidewalk elevator, 8.2.4
Car gate (*see also* Car door or gate)
definition of, Section 1.4
Car lighting (*see* Lighting, car)
Car material lift
definition of, Section 1.4
Car platform
definition of, Section 1.4
dumbwaiter, 6.2.2
electric elevator, 3.3
hand elevator, 7.2.3
hydraulic elevator, 4.2.2
protection against fire, 3.3.5
sidewalk elevator, 8.2.4
Car runby, bottom (*see* Runby, bottom car)
Car safety (*see also* Safety)
dumbwaiter, electric, 6.2.7
dumbwaiter, hydraulic, 6.3.5
electric elevator, 3.5.1
hand elevator, 7.3.1
roped-hydraulic elevator, 4.9.6
sidewalk elevator, 8.2.7
Car safety mechanism, movement of governor rope, 3.5.5
Car safety mechanism switch, 3.6.1
Car sill, hinged, 3.3.3
Car switch operation, 3.10.2
Car top, 3.4.1
Caution sign
escalator, 5.1.3
moving walk, 9.6.11
Ceiling intersection, guard
escalator, 5.1.3
moving walk, 9.3.8
Ceramic permanent magnet
definition of, Section 1.4
Chain
broken drive-chain device, escalator, 5.3.6
broken drive-chain device, moving walk, 9.6.6
broken step-chain device, escalator, 5.3.4
driving machine, electric elevator, 3.8.3
Check valve, 4.4.2
Class A general freight loading, 3.7.3
Class B motor vehicle loading, 3.7.3
Class C industrial truck loading, 3.7.3
Clearance, bottom car
definition of, Section 1.4
dumbwaiter, 6.1.2
electric elevator, 2.4.2
hand elevator, 7.1.4
hydraulic elevator, 4.1
Clearance, horizontal car
dumbwaiter, 6.1.2
electric elevator, 2.4.1
hand elevator, 7.1.4
hydraulic elevator, 4.1
Clearance, landing sill, 2.4.5
Clearance, top car
definition of, Section 1.4
dumbwaiter, 6.1.2
electric elevator, 2.4.4
hand elevator, 7.1.4
hydraulic elevator, 4.1
roped-hydraulic elevator, 4.9.1
Clearance, top counterweight
definition of, Section 1.4
dumbwaiter, 6.1.2
hand elevator, 7.1.4
hydraulic elevator, 4.8
roped-hydraulic elevator, 4.9.2
Clearance between escalator step and skirt panel, 5.1.2
Clearance between moving walk treadway and skirt panel, 9.3.3.4
Closing of hoistway door (*see* Hoistway door, closing of)
Collapsible gate, 3.4.2
Combplate
escalator, 5.5.1
moving walk, 9.4.1
Combplate, construction of, 5.1.9
Compensating rope sheave switch, 3.10.4
definition of, Section 1.4
Contact, electrical
car door or gate, 3.4.2
definition of, Section 1.4
hoistway door, 2.7.1
Control
definition of, Section 1.4
Control and operating circuit
electric elevator, 3.10.9
hydraulic elevator, 4.7.7

Copyright © 2009 by the American Society of Mechanical Engineers.
No reproduction may be made of this material without written consent of ASME.

Control equipment
dumbwaiter, electric, 6.2.13
dumbwaiter, hydraulic, 6.3.10
electric elevator, 3.10
hydraulic elevator, 4.7
sidewalk elevator, 8.2.14
Control room, elevator, dumbwaiter, material lift
definition of, Section 1.4
Control space, elevator, dumbwaiter, material lift
definition of, Section 1.4
Controller
definition of, Section 1.4
Conveyor, 1.1.2
Counterweight
electric elevator, 3.2
hand elevator, 7.2.2
hydraulic elevator, 4.8
sidewalk elevator, 8.2.3
Counterweight guard, 2.1.5
Counterweight runby, bottom (*see* Runby, bottom counterweight)
Counterweight safety
dumbwaiter, electric, 6.2.7
dumbwaiter, hydraulic, 6.3.6
electric elevator, 3.5.2
roped-hydraulic elevator, 4.9.6
sidewalk elevator, 8.2.7

Data tag, suspension rope, 3.12.2
Deck barricade, moving walk, 9.3.3.6
Definitions, Section 1.4
Designated attendant
definition of, Section 1.4
Disconnecting means
electric elevator, 3.10.5
hydraulic elevator, 4.7.5
Dispatching device
definition of, Section 1.4
Displacement switch
definition of, Section 1.4
Door (car or hoistway)
definition of, Section 1.4
Door, car (*see* Car door or gate)
Door, hoistway (*see* Hoistway door and Hoistway entrance)
Door hanger, 2.6.4
Door reopening device, 2.8.2
Driving machine
dumbwaiter, electric, 6.2.10
dumbwaiter, hydraulic, 6.3.8
electric elevator, 3.8
hydraulic elevator, 4.3
indirect (electric elevator), 3.8.3
moving walk, 9.5
sidewalk elevator, 8.2.9
winding drum, 3.8.2

Drum, 3.8.1
Dumbwaiter, Part VI

Earthquake protection device
definition of, Section 1.4
Electric contact
car door or gate, 3.4.2
hinged car platform sill, 3.10.4
hoistway door, 2.7.1
side emergency exit, 3.10.4
Electric elevator
hoistway and related construction, Part II
machinery and equipment, Part III
Electrical equipment
dumbwaiter, electric, 6.2.13
dumbwaiter, hydraulic, 6.3.10
electric elevator, 3.10
hydraulic elevator, 4.7
sidewalk elevator, 8.2.12
Electrical/electronic/programmable electronic system (E/E/PES)
definition of, Section 1.4
Electrical/electronic/programmable electronic (E/E/PE)
definition of, Section 1.4
Electrical protective device
electric elevator, 3.10.4
hydraulic elevator, 4.7.4
Elevator
definition of, Section 4.1
electric, hoistway and related construction, Part II
electric, machinery and equipment, Part III
hand, Part VII
hydraulic, Part IV
inclined, 1.1.2
limited use/limited application (definition of), Section 1.4
mine, 1.1.2
observation (definition of), Section 1.4
private residence, 1.1.2, Part X
roped-hydraulic, 4.9
screw column, 1.1.2
sidewalk, Part VIII
special purpose personnel, 1.1.2
used for construction, 1.1.2
Emergency doors, 3.4.4
Emergency exit, side (*see* Side emergency exit)
Emergency exit, top (*see* Top emergency exit)
Emergency operation
dumbwaiter, 6.2.14
electric elevator, 3.11.3
hydraulic elevator, 4.7.8
Emergency power, 3.11.2
Emergency signaling device
dumbwaiter, 6.2.14

Copyright © 2009 by the American Society of Mechanical Engineers.
No reproduction may be made of this material without written consent of ASME.

electric elevator, 3.11.1
hydraulic elevator, 4.7.8
Emergency stop button
escalator, 5.3.2
moving walk, 9.6.3
Emergency stop switch, 3.10.4
definition of, Section 1.4
Emergency terminal speed limiting device, 3.10.4
Enclosure, car (*see* Car enclosure)
Enclosure, hoistway (*see* Hoistway enclosure)
Enclosure, machine room (*see* Machine room enclosure)
Enforcing authority (*see* Authority having jurisdiction)
Entrance (*see also* Hoistway entrance)
definition of, Section 1.4
Entrance locked out of service
definition of, Section 1.4
Equalizer, suspension rope, 3.12.5
Escalator, Part V
definition of, Section 1.4
Escalator and moving walk manual reset
definition of, Section 1.4
Escalator deck
definition of, Section 1.4
Escalator molding
definition of, Section 1.4
Escalator newel
definition of, Section 1.4
Escalator newel base
definition of, Section 1.4
Escalator panel, exterior
definition of, Section 1.4
Escalator panel, interior
definition of, Section 1.4
Escalator skirt
definition of, Section 1.4
Escalator, tandem operation
definition of, Section 1.4
Exceptions to Code, 1.3

Factor of safety
definition of, Section 1.4
False car, 1.1.2
Fastening device, auxiliary
electric elevator, 3.12.9
dumbwaiter, 6.2.19
Fastening device, suspension rope, 3.12.8
Final terminal stopping device, 3.9.2
Finger guard
escalator, 5.1.6
moving walk, 9.3.10
Fire barrier
definition of, Section 1.4
Fire endurance
definition of, Section 1.4
Fire-protection rating
definition of, Section 1.4
Fire resistance
definition of, Section 1.4
Fire resistance rating, 2.1.1
definition of, Section 1.4
Fire resistive
definition of, Section 1.4
Fire-resistive construction
definition of, Section 1.4
Firefighters' service
electric elevator, 3.11.3
hydraulic elevator, 4.7.8
Fittings, hydraulic elevator piping, 4.4.4
Flat step
definition of, Section 1.4
Floating platform, 3.3.4
Frame, car (*see* Car frame)
Freight elevator
definition of, Section 1.4
Furnace hoist, 1.1.2

Gas spring return oil buffer switch, 3.10.4
definition of (buffer, gas spring return), Section 1.4
Gate (*see* Car gate; *see also* Car door or gate)
Gate, hoistway, hand elevator, 7.1.6
Gate, semiautomatic
definition of, Section 1.4
Governor
definition of (Speed governor), Section 1.4
electric elevator, 3.6
escalator, 5.3.3
moving walk, 9.6.4
roped-hydraulic elevator, 4.9.7
Governor overspeed switch, 3.6.1
Governor pull-through tension force
definition of, Section 1.4
Governor rope, 3.6.2
Governor rope, maximum permissible movement of, 3.5.5
Guard, counterweight, 2.1.5
Guard at ceiling intersection
escalator, 5.1.3
moving walk, 9.3.3.5
Guide rail, lubrication of, 3.5.6
overall length of, 3.5.7

Hand elevator, Part VII
Handrail
escalator, 5.1.5
moving walk, 9.3.4
Handrail guard
escalator, 5.1.6
moving walk, 9.3.4.2
Hanger, hoistway door, 2.6.4

Copyright © 2009 by the American Society of Mechanical Engineers.
No reproduction may be made of this material without written consent of ASME.

Hinged platform sill, 3.3.3
Hoistway
  definition of, Section 1.4
  dumbwaiter, 6.1
  electric elevator, 2.1
  hand elevator, 7.1
  hydraulic elevator, 3.1
  sidewalk elevator, 8.1
Hoistway, access to
  dumbwaiter, 6.1.8
  electric elevator, 2.7.4
  hand elevator, 7.1.2
Hoistway access switch, 2.7.4
  definition of, Section 1.4
Hoistway door
  distance from car door or gate, 3.4.3
  kinetic energy and force limitation, 2.8.1
  power operation, 2.8
  reopening device, 2.8.2
  restricted opening of, 2.7.5
  unlocking device, 2.7.4
Hoistway door, closing of
  dumbwaiter, 6.1.4
  electric elevator, 2.6.2
  hand elevator, 7.1.7
Hoistway door electric contact
  definition of, Section 1.4
  hoistway emergency door contacts, 2.7.6
Hoistway door locking device
  definition of, Section 1.4
  dumbwaiter, 6.1.6
  electric elevator, 2.7.1
  hand elevator, 7.1.9
  sidewalk elevator, 8.2.11
Hoistway enclosure
  definition of, Section 1.4
  dumbwaiter, 6.1
  electric elevator, 2.1.1
  hand elevator, 7.1
  hydraulic elevator, 4.1
  sidewalk elevator, 8.1
Hoistway entrance
  dumbwaiter, 6.1.3
  electric elevator, 2.6
  hand elevator, 7.1.5
Hoistway gate, 2.6
  definition of, Section 1.4
Hoistway gate locking device
  definition of, Section 1.4
  dumbwaiter, 6.1.6
  electric elevator, 2.7.1
  hand elevator, 7.1.9
Hoistway, projection into, 2.1.3
Hoistway protection of occupied space below
  electric elevator, 2.5
  roped-hydraulic elevator, 4.9.3
Horizontal car clearance (*see* Clearance, horizontal car)
Hydraulic elevator, Part IV

Illumination (*see* Lighting)
In-car stop switch, 3.10.4
Inclined elevator, 1.1.2
Indirect driving machine, 3.8.3
Industrial truck loading, 3.7.3
Inspection, 1.5
Installation
  definition of, Section 1.4
Intented car movement
  definition of, Section 1.4
Interlock, 2.7.1

Kinetic energy of door system, 2.8.1

Labeled
  definition of, Section 1.4
Laminated platform, 3.3
Landing access plates, 5.5.5
Landing, dumbwaiter
  definition of, Section 1.4
Landing, elevator
  definition of, Section 1.4
Landing, escalator or moving walk
  definition of, Section 1.4
Landing sill clearance, 2.4.5
Landing sill, projection into hoistway, 2.1.3
Landing zone
  definition of, Section 1.4
Leveling
  definition of, Section 1.4
Leveling device, anticreep, 4.7.3
Leveling zone
  definition of, Section 1.4
Light bulbs, protection of, 3.4.6
Lighting
  escalator, 5.4
  moving walk, 9.7
Lighting, car
  dumbwaiter, 6.2.6
  electric, 3.4.5
  hand elevator, 7.2.6
Lighting, machine room, 2.2.3
Line jack, 1.1.2
Listed
  definition of, Section 1.4
Loading
  dumbwaiter, 6.2.9
  electric elevator, 3.7
  hand elevator, 7.3.2
  hydraulic elevator, 4.2.4
  sidewalk elevator, 8.2.8

Copyright © 2009 by the American Society of Mechanical Engineers.
No reproduction may be made of this material without written consent of ASME.



Lock and contact, 2.7.1
Locking device, hoistway door (*see* Hoistway door locking device)
Lubrication of guide rail, 3.5.6

Machine automatic, 3.8.2
Machine, driving
  definition of, Section 1.4
Machine and control rooms, remote
  definition of, Section 1.4
Machine room
  definition of, Section 1.4
  dumbwaiter, 6.1
  electric elevator, 2.2
  hydraulic elevator, 4.1
  sidewalk elevator, 8.1
Machine room enclosure
  dumbwaiter, 6.1.1
  electric elevator, 2.2
  hydraulic elevator, 4.1
Machinery space
  definition of, Section 1.4
  dumbwaiter, 6.1.1
  electric elevator, 2.2
  hydraulic elevator, 4.1
Maintenance, 1.5
Material hoist, 1.1.2
Material lift with automatic transfer device, 1.1.2
Mechanical lock and electric contact, 2.7.1
Mechanical spring-return oil buffer
  definition of (buffer, mechanical spring-return), Section 1.4
Mechanically controlled operating valve, 4.4.3
Mechanized parking garage equipment, 1.1.2
Mine elevator, 1.1.2
Minimum rated load
  freight elevator, 3.7.3
  passenger elevator, 3.7.1
Mode of operation
  definition of, Section 1.4
Modernization, 1.5
Module
  definition of, Section 1.4
Motor field sensing means, 3.10.4
Motor generator overspeed protection, 3.10.4
Motor generator running switch, 3.10.4
Motor vehicle loading, 3.7.3
Movable platform, 3.3.4
Moving walk, Part IX
  definition of, Section 1.4
Multideck elevator
  definition of, Section 1.4

Next available landing
  definition of, Section 1.4
Nonshearing astragal, hoistway door, 2.6.5
Nonstop switch
  definition of, Section 1.4
Nonvision wing, 3.4.3
Normal terminal stopping device
  dumbwaiter, electric, 6.2.11
  dumbwaiter, hydraulic, 6.3.9
  electric elevator, 3.9.1
  hydraulic elevator, 4.6
  sidewalk elevator, 8.2.10

Observation elevator
  definition of, Section 1.4
Occupied space below hoistway
  electric elevator, 2.5
  roped-hydraulic elevator, 4.9.3
Oil buffer (*see also* Buffer)
  definition of (buffer, oil), Section 1.4
Oil buffer stroke
  definition of (buffer, oil stroke), Section 1.4
Operating device
  definition of, Section 1.4
  dumbwaiter, electric, 6.2.13
  dumbwaiter, hydraulic, 6.3.10
  electric elevator, 3.10
  escalator, 5.3
  hydraulic elevator, 4.7
  moving walk, 9.6
Operating speed in the down direction
  definition of, Section 1.4
Operating valve, mechanically controlled, 4.4.3
Operation
  definition of, Section 1.4
Orchestra lift, 1.1.2
Overhead structure
  definition of, Section 1.4
Overspeed protection, motor generator, 3.10.4
Overspeed switch, governor, 3.6.1

Pallet, moving walk
  definition of, Section 1.4
Pallet-type treadway, moving walk, 9.3.5
Parking device
  definition of, Section 1.4
  dumbwaiters, 6.1.7
  electric elevators, 2.7.3
Parking garage equipment, 1.1.2
Personnel hoist, 1.1.2
Phase I emergency recall
  definition of, Section 1.4
  operation, 3.11.3
Phase II emergency in-car
  definition of, Section 1.4
  operation, 3.11.3
Phase reversal and failure protection, 3.10.6
Piping
  hydraulic elevator supply piping, 4.4.4

Copyright © 2009 by the American Society of Mechanical Engineers.
No reproduction may be made of this material without written consent of ASME.

in hoistway, 2.1.4
in machine room, 2.2.5
Piston
definition of, Section 1.4
Piston connection, 4.9.5
Piston rod, 4.9.5
Piston stop, roped-hydraulic elevator, 4.9.4
Pit, 2.3
definition of, Section 1.4
Pit guard, 2.1.5
Platform, car (*see* Car platform)
Platform, floating, 3.3.4
Platform guard, 3.3.2
Platform sill, hinged, 3.3.3
Plunger connection, 4.3.1
Plunger, ram
definition of, Section 1.4
Plunger stop
hydraulic elevator, 4.3.2
roped-hydraulic elevator, 4.9.4
Portable equipment, 1.1.2
Position indicator
definition of, Section 1.4
Power operation of doors and gates, 2.8
Power supply line disconnecting means
electric elevator, 3.10.5
hydraulic elevator, 4.7.5
Pressure tank, 4.5.2
Private residence
definition of, Section 1.4
Private residence elevator, 1.1.2
definition of, Section 1.4
Projection into hoistway, 2.1.3
Protection of space below hoistway
electric elevator, 2.5
roped-hydraulic elevator, 4.9.3
Pull strap, hoistway door, 2.6.6
Pump relief valve, 4.4.1
Purpose of Code, 1.3

Rated load
definition of, Section 1.4
freight elevator, 3.7.3
passenger elevator, 3.7.1
Rated load performance
definition of, Section 1.4
Rated speed
definition of, Section 1.4
Recyling operation, telescopic plunger
definition of, Section 1.4
Reference documents, 1.6
Regenerated power, absorption of, 3.10.10
Release and application of safety, 3.5.4
Releasing carrier, governor rope
definition of, Section 1.4
Relief valve, 4.4.1
Reopening device, hoistway door, 2.8.2
Repair, 1.5
definition of, Section 1.4
Replacement (*see* Alteration)
Replacement of parts, 1.5
Restricted area
definition of, Section 1.4
Restricted opening of hoistway door, 2.7.5
Reversal stop device
escalator, 5.3.9
moving walk, 9.6.8
Rise (*see* Travel)
Riser, escalator, 5.1.7
Rolling shutter device
escalator, 5.3.8
moving walk, 9.6.7
Rope, car-counterweight
definition of, Section 1.4
Rope, compensating
definition of, Section 1.4
Rope, counterweight
definition of, Section 1.4
Rope, governor (*see* Governor rope)
Rope sprocket drive
definition of, Section 1.4
Rope, suspension
definition of, Section 1.4
electric elevator, 3.12
roped-hydraulic elevator, 4.9.10
Rope data tag, 3.12.2
Rope equalizer, 3.12.5
definition of, Section 1.4
Rope fastening device (*see* Fastening device)
Rope operating device, 3.10.1
Roped-hydraulic elevator, 4.9
definition of, Section 1.4
Runby, bottom car, 2.4.3
definition of, Section 1.4
Runby, bottom counterweight
definition of, Section 1.4
electric elevator, 2.4.3
roped-hydraulic elevator, 4.9.2
Runway
definition of, Section 1.4

Safety
definition of, Section 1.4
dumbwaiter, 6.2.7
electric elevator, 3.5
hand elevator, 8.2.7
sidewalk elevator, 7.3.1
roped-hydraulic elevator, 4.9.6
Safety bulkhead
definition of, Section 1.4
Safety integrity level (SIL)
definition of, Section 1.4

Copyright © 2009 by the American Society of Mechanical Engineers.
No reproduction may be made of this material without written consent of ASME.

Safety mechanism, movement of governor rope, 3.5.5
Safety mechanism switch, 3.6.1
Screw column
  definition of, Section 1.4
Screw column elevator, 1.1.2
Seismic switch
  definition of, Section 1.4
Shaft (*see* Hoistway)
Shafter, 1.1.2
Sheave
  electric elevator, 3.8.1
  roped-hydraulic elevator, 4.9.8
Shipper rope, 3.10.1
Side emergency exit, 3.4.4
Side emergency exit electric contact, 3.10.4
Sidewalk elevator, Part VIII
  definition of, Section 1.4
Sight guard
  definition of, Section 1.4
Sight guard, car door or gate, 3.4.3
Sign, escalator caution, 5.3.11
Sign or freight loading, 3.7.5
Signaling device, emergency
  electric elevator, 3.11.1
  hydraulic elevator, 4.7.8
Skip hoist, 1.1.2
Skirt panel (*see also* Skirt obstruction device)
  clearance from escalator step, 5.1.2
  clearance from treadway, 9.3.3.4
Slack rope switch
  definition of, Section 1.4
  electric elevator, 3.10.4
  roped-hydraulic elevator, 4.9.9
Sleeving
  definition of, Section 1.4
Space guard, car door or gate, 3.4.3
Spare rope turns, winding drum machine, 3.12.7
Special purpose personnel elevator, 1.1.2
  definition of, Section 1.4
Speed governor (*see* Governor)
Speed governor overspeed switch (*see* Governor overspeed switch)
Speed limiting device, 3.10.4
Spring buffer
  definition of (buffer, spring), Section 1.4
Spring buffer stroke
  definition of (buffer, spring stroke), Section 1.4
Sprinkler
  in hoistway, 2.1.4
  in machine room, 2.2.5
Stage lift, 1.1.2
Stairway chairlift, 1.1.2
Stanchions
  sidewalk elevator, 8.2.5
Standby power, 3.11.2
Starting switch
  escalator, 5.3.1
  moving walk, 9.6.2
Static switching
  definition of, Section 1.4
Step, escalator
  broken step chain device, 5.3.4
  clearance from skirt panel, 5.1.2
  riser, 5.1.7
  tread, 5.1.8
  upthrust device, 5.1.7
Stop button
  escalator, 5.3.2
  moving walk, 9.6.3
Stop motion switch, 3.8.2
Stop ring
  hydraulic elevator, 4.3.2
  roped-hydraulic elevator, 4.9.4
Stop switch, elevator
  definition of, Section 1.4
  emergency, 3.10.4
  in-car, 3.10.4
  pit, 2.3.3
  top-of-car, 3.10.4
Stop valve, 4.4.3
Supply piping, hydraulic elevator, 4.4.4
  definition of, Section 1.4
Suspension rope
  electric elevator, 3.12
  roped-hydraulic elevator, 4.9.10
Suspension rope equalizer, 3.12.5
Suspension rope fastening device (*see* Fastening device, suspension rope)

Tandem operation
  definition of, Section 1.4
  escalator, 5.3.10
  moving walk, 9.6.9
Tank, 4.5
Terminal stopping device
  definition of, Section 1.4
  dumbwaiter, electric, 6.2
  dumbwaiter, hydraulic, 6.3.9
  electric elevator, 3.9
  hydraulic elevator, 4.6
  hydraulic elevator, automatic stop valve, 4.4.3
  sidewalk elevator, 8.2.10
  winding drum machine, 3.8.2
Testing, 1.5
Threshold comb
  definition of, Section 1.4
Threshold plate
  definition of, Section 1.4
Top car clearance (*see* Clearance, top car)
Top counterweight clearance (*see* Clearance, top counterweight)
Top emergency exit, 3.4.4

Copyright © 2009 by the American Society of Mechanical Engineers.
No reproduction may be made of this material without written consent of ASME.

Top of car, 3.4.1
Top of car operating device
  electric elevator, 3.10.3
  hydraulic elevator, 4.7.2
Transom
  definition of, Section 1.4
Travel (*see* Rise)
Traveling cable
  definition of, Section 1.4
Tread
  escalator step, 5.1.8
  moving walk, Section 9.3
Truck zone
  definition of, Section 1.4
Tubes, protection of, 3.4.6
Type C safety buffer switch, 3.10.4

Unintended car movement
  definition of, Section 1.4
Unlocking device, hoistway door, 2.7.4
Unlocking zone, 2.7.5
  definition of, Section 1.4
Upthrust device, escalator step, 5.1.7

Vacuum relief valve, 4.5.2
Valley break
  definition of, Section 1.4
Valve, 4.4
Ventilation, machine room, 2.2.4
Vision panel, hoistway door, 2.6.3
  dumbwaiter, 6.1.5
  electric elevator, 2.6.3
  hand elevator, 7.1.8
Volatile memory
  definition of, Section 1.4

Weatherproof
  definition of, Section 1.4
Wheelchair lift, 1.1.2
Winding drum machine, 3.8.2
  securing of ropes, 3.12.6
  spare rope turns, 3.12.7
Window
  definition of, Section 1.4
Window in hoistway enclosure, 2.1.2
Wire rope (*see* Rope)
Working pressure
  definition of, Section 1.4

Copyright © 2009 by the American Society of Mechanical Engineers.
No reproduction may be made of this material without written consent of ASME.

ASME Services

ASME is committed to developing and delivering technical information. At ASME's Information Central, we make every effort to answer your questions and expedite your orders. Our representatives are ready to assist you in the following areas:

ASME Press
Codes & Standards
Credit Card Orders
IMechE Publications
Meetings & Conferences
Member Dues Status
Member Services & Benefits
Other ASME Programs
Payment Inquiries
Professional Development
Short Courses
Publications
Public Information
Self-Study Courses
Shipping Information
Subscriptions/Journals/Magazines
Symposia Volumes
Technical Papers

How can you reach us? It's easier than ever!

There are four options for making inquiries* or placing orders. Simply mail, phone, fax, or E-mail us and an Information Central representative will handle your request.

Mail
ASME
22 Law Drive, Box 2900
Fairfield, New Jersey
07007-2900

Call Toll Free
US & Canada: 800-THE-ASME
(800-843-2763)
Mexico: 95-800-THE-ASME
(95-800-843-2763)
Universal: 973-882-1167

Fax—24 hours
973-882-1717
973-882-5155

E-Mail—24 hours
Infocentral@asme.org

* Information Central staff are not permitted to answer inquiries about the technical content of this code or standard. Information as to whether or not technical inquiries are issued to this code or standard is shown on the copyright page. All technical inquiries must be submitted in writing to the staff secretary. Additional procedures for inquiries may be listed within.

Copyright © 2009 by the American Society of Mechanical Engineers.
No reproduction may be made of this material without written consent of ASME.

INTENTIONALLY LEFT BLANK

Copyright © 2009 by the American Society of Mechanical Engineers.
No reproduction may be made of this material without written consent of ASME.

ASME A17.3-2008

ISBN-13: 978-0-7918-3155-7
ISBN-10: 0-7918-3155-8





A12308

Copyright © 2009 by the American Society of Mechanical Engineers.
No reproduction may be made of this material without written consent of ASME.

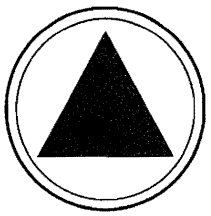

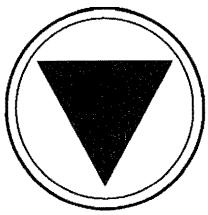

A17.3 Existing Elevators and Escalators

INTERPRETATIONS NO. 7

January 2005–January 2008

THE AMERICAN SOCIETY OF MECHANICAL ENGINEERS

THREE PARK AVENUE • NEW YORK, NY 10016

Copyright © 2009 by the American Society of Mechanical Engineers.
No reproduction may be made of this material without written consent of ASME.

No part of this document may be reproduced in any form,
in an electronic retrieval system or otherwise,
without the prior written permission of the publisher.

Copyright © 2009 by
THE AMERICAN SOCIETY OF MECHANICAL ENGINEERS
All rights reserved
Printed in U.S.A.

Copyright © 2009 by the American Society of Mechanical Engineers.
No reproduction may be made of this material without written consent of ASME.



ASME A17.3
INTERPRETATIONS NO. 7

January 2005 through January 2008

INTRODUCTION

As a service to persons who use the A17.3 Code for enforcement or as a guide, the A17 Committee renders interpretations of the requirements upon request. The Preface to the Code explains the procedure for requesting interpretations.

This booklet includes the interpretations that were issued by the A17 Committee from January 2005 through January 2008. Subsequent interpretations will be included with each addenda and new edition of the Code.

APPLICABILITY OF INTERPRETATIONS

Each interpretation applies to the edition and supplements listed for that inquiry. Many of the Rules on which the interpretations have been made have been revised in later editions or supplements. Where such revisions have been made, the interpretations may no longer be applicable to the revised requirement.

ASME procedures provide for reconsideration of these interpretations when or if additional information is available which might affect any interpretation. Further, persons aggrieved by any interpretation may appeal to the cognizant ASME committee or subcommittee. ASME does not "approve," "certify," "rate," or "endorse" any item, construction, proprietary device, or activity.

FORM AND ARRANGEMENT

Inquiry Number. The interpretations are listed in the order of the assigned serial numbers. The first two digits represent the year in which the interpretations were received.

Subject. The primary Rule and subject of the interpretation is listed for each inquiry.

Edition. For each interpretation, the edition and addenda, if any, on which the interpretation was rendered are listed.

Question. The questions are taken verbatim from the original inquiries except for editorial corrections necessary to improve clarity.

Answer. The answers are those approved by the A17 Committee, except for editorial corrections necessary to improve clarity.

Figures. Where the original inquiry included a plan or drawing that was essential for the understanding of the interpretation, a figure has been included.

Approval Dates. The date of approval by the A17 Committee is listed for each interpretation.

Copyright © 2009 by the American Society of Mechanical Engineers.
No reproduction may be made of this material without written consent of ASME.

INTENTIONALLY LEFT BLANK

Copyright © 2009 by the American Society of Mechanical Engineers.
No reproduction may be made of this material without written consent of ASME.

Inquiry: 05-09

Subject: Para. 3.4.5

Edition: ASME A17.3-2002

Question: Does A17.3 require top-of-car lighting?

Answer: No.

A17 Standards Committee Approval: May 18, 2005

Inquiry: 05-10

Subject: Para. 3.10.4(u)

Edition: ASME A17.3-2002

Question: Are the emergency stop switches required by 3.10.4(u) required to conform to 3.10.4(e)?

Answer: No.

A17 Standards Committee Approval: May 18, 2005

Inquiry: 05-47

Subject: Para. 2.2.2, Access to Machine Rooms and Machinery Spaces

Edition: ASME A17.3-2002

Background: The following questions are based on having a basement of mid-hoistway mounted driving machine with an overhead machinery space with beams, sheaves, and a governor at the top of the hoistway with no floor underneath the equipment.

Question (1): Does para. 2.2.2 permit the only means of access to a governor to be through the hoistway?

Answer (1): Yes. However, other means of access are permitted.

Question (2): Does 2.2.2 permit the only means of access to an overhead machinery space containing sheaves and governor to be through the hoistway?

Answer (2): Yes. However, other means of access are permitted.

Question (3): Does 2.2.2 permit the only means of access to an overhead machinery space containing sheaves and governor to be through the hoistway via the car top?

Answer (3): Yes. However, other means of access are permitted.

Question (4): Does 2.2.2 permit the only means of access to an overhead machinery space containing sheaves and a governor to be through the hoistway via a permanently installed ladder running through the full length of the hoistway?

Answer (4): Yes. However, other means of access are permitted.

Question (5): Would the answers to Questions (1) through (4) be any different if the beams, sheaves, and governor had a floor underneath them?

Answer (5): No.

A17 Standards Committee Approval: May 10, 2006

Copyright © 2009 by the American Society of Mechanical Engineers.
No reproduction may be made of this material without written consent of ASME.

Inquiry: 06-38

Subject: 2.2.5(c), Pipes Conveying Gases, Vapors, or Liquids; 3.11.3, Firefighter's Service; 4.7.8, Emergency Operation and Signaling Devices

Edition: ASME A17.3-1996

Question (1): Per 4.7.8, an existing hydraulic elevator that has a travel distance of less than 25 ft is not required to perform recall functions. If sprinklers are proposed to be installed within the elevator machine room and pit, is automatic power shunt-trip required prior to sprinkler activation (via heat detectors)? If "yes," can power be removed if the existing elevator controller is incapable of recalling the elevator?

Answer (1): This is not addressed in A17.3-1996.

Question (2): Automatic sprinklers are proposed to be installed within the elevator machine room of a 45 yr old elevator. The existing traction elevator is incapable of performing recall functions (recall was not required at the time of the original installation). Is automatic power shunt-trip required prior to sprinkler activation (via heat detectors)? If "yes," can power be removed if the existing elevator controller is incapable of recalling the elevator?

Answer (2): See answer to Question (1).

A17 Standards Committee Approval: September 20, 2006

Inquiry: 07-15

Subject: Section 2.3

Edition: ASME A17.3-2002

Question: Does Section 2.3 require pit ladders to be installed?

Answer: Means of access is required; however, that means of access does not need to be a permanently installed pit ladder.

A17 Standards Committee Approval: May 23, 2007

Copyright © 2009 by the American Society of Mechanical Engineers.
No reproduction may be made of this material without written consent of ASME.