NOTICE OF INCORPORATION

United States Legal Document

☞ All citizens and residents are hereby advised that this is a legally binding document duly incorporated by reference and that failure to comply with such requirements as hereby detailed within may subject you to criminal or civil penalties under the law. Ignorance of the law shall not excuse noncompliance and it is the responsibility of the citizens to inform themselves as to the laws that are enacted in the United States of America and in the states and cities contained therein. ☜

* *
*

ASME A17.5, Standard for Elevator and Escalator Electrical Equipment, 2004 Edition, as required by States and Municipalities, including Idaho, Minnesota, Nevada, et. alia.

CSA B44.1-04/ASME-A17.5-2004

Elevator and escalator electrical equipment



The American Society of Mechanical Engineers



CANADIAN STANDARDS ASSOCIATION

Copyright © 2004 by the American Society of Mechanical Engineers.
No reproduction may be made of this material without written consent of ASME.



Page intentionally blank

Copyright © 2004 by the American Society of Mechanical Engineers.
No reproduction may be made of this material without written consent of ASME.

CSA Standards Update Service

CSA B44.1-04/ASME-A17.5-2004
December 2004

Title: *Elevator and escalator electrical equipment*
Pagination: 72 pages (xxii preliminary and 50 text), each dated **December 2004**

Automatic notifications about any updates to this publication are available.

- To register for e-mail notifications, and/or to download any existing updates in PDF, enter the Online Store at **www.ShopCSA.ca** and click on **My Account** on the navigation bar.

  The **List ID** for this document is **2015756**.

- To receive printed updates, please complete and return the attached card.

Name _____

Organization _____

Address _____

City _____

Province/State _____

Country _____ Postal/Zip Code _____

E-mail _____

I consent to CSA collecting and using the above information to send me updates relating to this publication.

Visit CSA's policy on privacy at www.csagroup.org/legal to find out how we protect your personal information.

Copyright © 2004 by the American Society of Mechanical Engineers.
No reproduction may be made of this material without written consent of ASME.

Affranchir suffisamment
Place Stamp Here

ASSOCIATION CANADIENNE DE NORMALISATION
BUREAU CENTRAL DE L'INFORMATION
5060, SPECTRUM WAY, BUREAU 100
MISSISSAUGA ON L4W 5N6
CANADA

CANADIAN STANDARDS ASSOCIATION
CONSOLIDATED MAILING LIST
5060 SPECTRUM WAY, SUITE 100
MISSISSAUGA ON L4W 5N6
CANADA

Copyright © 2004 by the American Society of Mechanical Engineers.
No reproduction may be made of this material without written consent of ASME.

Copyright © 2004 by the American Society of Mechanical Engineers.
No reproduction may be made of this material without written consent of ASME.

CSA Standard

CSA B44.1-04/ASME-A17.5-2004
Elevator and escalator electrical equipment

The American Society of Mechanical Engineers®

CANADIAN STANDARDS ASSOCIATION®

®*Registered trade-mark of Canadian Standards Association*

Published in December 2004 by Canadian Standards Association
A not-for-profit private sector organization
5060 Spectrum Way, Suite 100, Mississauga, Ontario, Canada L4W 5N6
1-800-463-6727 • 416-747-4044

Visit our Online Store at www.ShopCSA.ca

ISBN 1-55397-506-5
Technical Editor: *T. (Jeet) Tulshi*

© Canadian Standards Association — 2004

All rights reserved. No part of this publication may be reproduced in any form whatsoever without the prior permission of the publisher.

Canadian Standards Association has granted the American Society of Mechanical Engineers (ASME) permission to reprint, repackage, and sell this Standard.

Inquiries should be addressed to: Canadian Standards Association, 5060 Spectrum Way, Suite 100, Mississauga, Ontario, Canada, L4W 5N6; or the American Society of Mechanical Engineers, 345 East 47th Street, New York, New York, USA, 10017.

Copyright © 2004 by the American Society of Mechanical Engineers.
No reproduction may be made of this material without written consent of ASME.



Contents

CSA B44 Technical Committee on Elevator Safety Code *vi*

CSA B44.1/ASME-A17.5 Joint Committee on Elevator and Escalator Electrical Equipment *x*

ASME A17 Elevator and Escalator Committee *xii*

Preface *xx*

CSA Foreword *xxii*

1 Scope *1*

2 Reference publications and abbreviations *2*
2.1 Reference publications *2*
2.2 Abbreviations *3*

3 Construction *4*

4 Enclosure construction *4*
4.1 General *4*
4.2 Thickness of cast-metal enclosures for live parts *4*
4.3 Thickness of sheet-metal enclosures for live parts *4*

5 Doors and covers *5*

6 Polymeric enclosures *5*

7 Openings in enclosures *7*

8 Wire-bending space *8*

9 Special-purpose enclosures *9*

10 Protection against corrosion *9*

11 Insulating material *9*

12 Protective devices *9*

13 Protection of control circuits *10*
13.1 Control circuit conductor protection *10*
13.2 Control circuit transformer protection *10*

14 Internal wiring *11*

15 Wiring terminals and leads *12*

16 Electrical spacings *13*

17 Grounding *17*

Copyright © 2004 by the American Society of Mechanical Engineers.
No reproduction may be made of this material without written consent of ASME.

18 Printed circuit boards *18*

19 Tests *18*
19.1 General *18*
19.2 Endurance *18*
19.3 Solid-state ac motor controller tests *19*
19.3.1 General *19*
19.3.2 Test voltage *19*
19.3.3 Temperature test *19*
19.3.4 Dielectric voltage withstand test *19*
19.3.5 Overvoltage and undervoltage tests *19*
19.3.6 Overload and endurance tests *19*
19.3.7 Exception *20*
19.3.8 Short-circuit test *20*
19.3.9 Breakdown of components test *21*
19.4 Power-conversion equipment *21*
19.4.1 General *21*
19.4.2 Temperature test *21*
19.4.3 Dielectric voltage withstand test *22*
19.4.4 Operation tests *22*
19.4.5 Normal operation *22*
19.4.6 Contactor overload *22*
19.4.7 Single phasing *23*
19.4.8 Inoperative blower motor *23*
19.4.9 Clogged filter *23*
19.4.10 Current-limiting control *23*
19.4.11 Breakdown of components *23*
19.5 Impact test *23*
19.6 Printed circuit board coatings *24*
19.6.1 General *24*
19.6.2 Dielectric strength (new samples) *24*
19.6.3 Dielectric strength (aged samples) *24*
19.6.4 Dielectric strength (after humidity conditioning) *24*
19.6.5 Adhesion *24*
19.7 Transient-voltage-surge suppression *24*
19.8 Compression *24*
19.9 Deflection *25*
19.10 Cord pullout *25*

20 Marking *25*

Annexes
A (informative) — Factory test *48*
B (informative) — CSA and ASME elevator publications *49*

Tables
1 — Thickness of sheet metal for enclosures — Carbon steel or stainless steel *30*
2 — Thickness of sheet metal for enclosures — Aluminum, copper, or brass *31*
3 — Size of bonding conductor *32*
4 — Minimum acceptable distance from an opening to a part that can involve a risk of electric shock or injury to persons *32*
5 — Minimum spacings for live parts *33*
6 — Wire-bending space at the terminal of enclosed motor controllers *34*
7 — Maximum acceptable rating of overcurrent device *34*

Copyright © 2004 by the American Society of Mechanical Engineers.
No reproduction may be made of this material without written consent of ASME.

8 — Allowable ampacities of insulated copper conductors inside industrial control equipment enclosures (based on a room ambient temperature of 40 °C (104°F)) *35*
9 — Ampacity correction factors for multiple conductor groupings *35*
10 — Full-load motor-running currents in amperes corresponding to various ac horsepower ratings *36*
11 — Full-load motor-running currents in amperes corresponding to various dc horsepower ratings *37*
12 — Minimum conductor spacings for printed circuit boards *38*
13 — Minimum acceptable spacings for equipment for which transient voltages are known and controlled *39*
14 — Dimensions of bushings *40*
15 — Size and number of conductors per grounding termination *40*
16 — Size of grounding conductors *41*
17 — Sequence of tests for solid-state ac motor controllers *41*
18 — Maximum permissible temperature rises *42*
19 — Sequence of tests for power-conversion equipment *44*
20 — Rating codes for ac control circuit contacts at 50 and 60 Hz *45*
21 — Rating codes for dc control circuit contacts *46*

Figures

1 — Articulated probe *47*

Copyright © 2004 by the American Society of Mechanical Engineers.
No reproduction may be made of this material without written consent of ASME.

CSA B44 Technical Committee on Elevator Safety Code

R. Hadaller	Technical Standards & Safety Authority, Toronto, Ontario	*Chair*
D. McColl	Otis Elevator Company, Mississauga, Ontario	*Vice-Chair*
T. Baik	Toronto Transit Commission, Toronto, Ontario	
L. Bialy	Otis Elevator Company, Farmington, Connecticut, USA	*Associate*
B. Blackaby	Otis Elevator Company, Farmington, Connecticut, USA	*Associate*
S. Bornstein	KONE Inc., Toronto, Ontario	*Associate*
A.D. Brown	KONE Inc., Toronto, Ontario	
G. Burdeshaw	American Society of Mechanical Engineers, New York, New York, USA	*Associate*
A. Byram	New Brunswick Department of Public Safety, Saint John, New Brunswick	
R. Cavan	Human Resources Development Canada, Ottawa, Ontario	
D. Cook	City of Coquitlam Fire Rescue, Coquitlam, British Columbia	
E.A. Donoghue	Edward A. Donoghue Associates Incorporated, Salem, New York, USA	*Associate*
R. Droste	Avon, Connecticut, USA	*Associate*
S. Fisher	Whitby, Ontario	*Associate*
G.W. Gibson	George W. Gibson & Associates Inc., Sedona, Arizona, USA	*Associate*
P. Girouard	Plafolift André Picard Inc., Warwick, Québec	*Associate*
H.E. (Buddy) Godwin Jr.	State of North Carolina, North Carolina, USA	*Associate*

Copyright © 2004 by the American Society of Mechanical Engineers.
No reproduction may be made of this material without written consent of ASME.

A.N. Griffin	Alberta Municipal Affairs, Edmonton, Alberta	
T. Hamilton	British Columbia Safety Authority, New Westminster, British Columbia	*Associate*
R.E. Haukeness	Saskatchewan Corrections & Public Safety, Regina, Saskatchewan	
A. Hopkirk	Canadian Elevators Contractors Association, Scarborough, Ontario	
U. Huskic	Fujitec Canada Inc., Richmond Hill, Ontario	
I. Jay	British Columbia Safety Authority, New Westminster, British Columbia	
K. Jenkins	KJA Consultants Incorporated, Montréal, Québec	
G.A. Kappenhagen	Schindler Elevator Corporation, Morristown, New Jersey, USA	*Associate*
R.J. Karen (Deceased)	Alberta Elevating Devices & Amusement Rides Safety Association, Calgary, Alberta	*Associate*
F. Kassem	CNIM Canada Inc., Montréal, Québec	
I. Kennedy	Brighton, Ontario	
R. Kennedy	Nova Scotia Department of Environment and Labour, Halifax, Nova Scotia	
J. Koshak	Thyssenkrupp Elevators Corporation, El Cajon, California, USA	*Associate*
R.-A. Lamoureux	Société de Transport de Montréal, Montréal, Québec	
E. MacArthur	Prince Edward Island Department of Community and Cultural Affairs, Charlottetown, Prince Edward Island	
R. MacKenzie	CSA, Toronto, Ontario	*Associate*
A. Marchant	Intervect USA Inc., Bridgeport, Connecticut, USA	
R. Marion	Government of the Northwest Territories, Public Works & Services, Yellowknife, Northwest Territories	

Copyright © 2004 by the American Society of Mechanical Engineers.
No reproduction may be made of this material without written consent of ASME.

R. Marsiglio	H.H. Angus & Associates Ltd., Don Mills, Ontario	
I.W. Mault	Manitoba Department of Labour and Immigration, Winnipeg, Manitoba	
T. McCann	Ajax, Ontario	
A. McGregor	Rooney, Irving & Associates Ltd., Ottawa, Ontario	*Associate*
S. Mercier	Régie du bâtiment du Québec, Montréal, Québec	
R. Moran	British Columbia Safety Authority, New Westminster, British Columbia	*Associate*
J. Murphy	British Columbia Safety Authority, New Westminster, British Columbia	*Associate*
C.E. Nicol	The Toronto Advocacy Committee of the CNIB, Toronto, Ontario	
T.T. Nguyen	Société de Transport de Montréal, Montréal, Québec	*Associate*
I. Oleszkiewicz	National Research Council Canada, Ottawa, Ontario	*Associate*
M. Pedram	Thyssenkrupp Elevator, Scarborough, Ontario	
H.E. Peelle	The Peelle Company Limited, Brampton, Ontario	
A. Rehman	Schindler Elevator Corporation, Scarborough, Ontario	
A. Reistetter	National Elevator & Escalator Association, Mississauga, Ontario	*Associate*
J. Rooney	Priestman, Neilson & Associates Ltd., Nepean, Ontario	
R. Scharfe	Public Works and Government Services Canada, Ottawa, Ontario	
E. Sopeju	Underwriters' Laboratories of Canada, Scarborough, Ontario	*Associate*
B. Virk	Unitech Elevator Company, Pickering, Ontario	
D. Warne	Alberta Elevating Devices & Amusement Rides Safety Association, Calgary, Alberta	*Associate*

Copyright © 2004 by the American Society of Mechanical Engineers.
No reproduction may be made of this material without written consent of ASME.

S. Wood	Wire Rope Industries Limited, Pointe-Claire, Québec	*Associate*
P. Yau	Public Works and Government Services Canada, Toronto, Ontario	
T. (Jeet) Tulshi	CSA, Mississauga, Ontario	*Project Manager*

Copyright © 2004 by the American Society of Mechanical Engineers.
No reproduction may be made of this material without written consent of ASME.

CSA B44.1/ASME-A17.5 Joint Committee on Elevator and Escalator Electrical Equipment

H.E. (Buddy) Godwin Jr.	State of North Carolina, North Carolina, USA	*Chair*
J.H. Shull	Otis Elevator Company, Farmington, Connecticut, USA	*Vice-Chair*
R.M. Bassman	City of Los Angeles, West Los Angeles, California, USA	
J.W. Blain	Schindler Elevator Corporation, Morristown, New Jersey, USA	
A.D. Brown	KONE Inc., Toronto, Ontario	
G. Burdeshaw	American Society of Mechanical Engineers, New York, New York, USA	
J.D. Busse	Fujitec America Incorporated, Lebanon, Ohio, USA	
J. Caldwell	Thyssenkrupp Elevator, Horn Lake, Mississippi, USA	
B. Colavecchio	Underwriters Laboratories Inc., Research Triangle Park, North Carolina, USA	*Associate*
J.L. Dellaporta	Otis Elevator Company, Farmington, Connecticut, USA	*Associate*
S. Fisher	Whitby, Ontario	
R. Hadaller	Technical Standards & Safety Authority, Toronto, Ontario	
R.G. Hames	Underwriters Laboratories Inc., Northbrook, Illinois, USA	*Associate*
H. Hidaka	Underwriters Laboratories Inc., Northbrook, Illinois, USA	*Associate*
M.L. Hite	KONE Inc., McKinney, Texas, USA	
R. MacKenzie	CSA, Toronto, Ontario	

Copyright © 2004 by the American Society of Mechanical Engineers.
No reproduction may be made of this material without written consent of ASME.

D. McColl	Otis Elevator Company, Mississauga, Ontario	
R. Moran	British Columbia Safety Authority, New Westminster, British Columbia	
A. Rehman	Schindler Elevator Corporation, Scarborough, Ontario	
J.P. Rennekamp	Fujitec America Incorporated, Lebanon, Ohio, USA	
J.M. Weber	KONE Inc., Moline, Illinois, USA	*Associate*
T. (Jeet) Tulshi	CSA, Mississauga, Ontario	*Project Manager*

Copyright © 2004 by the American Society of Mechanical Engineers.
No reproduction may be made of this material without written consent of ASME.

ASME A17 ELEVATOR AND ESCALATOR COMMITTEE

Standards Committee

R.L. Seymour, *Chair*
H.E. Peelle III AG, *Vice-Chair*
D.L. Steel AF, *Vice-Chair*
G.A. Burdeshaw, *Secretary*
L. Bialy, Otis Elevator
N.E. Marchitto, *Alternate,* Otis Elevator
B.D. Black, Eastern Paralyzed Veterans Association
W.C. Burklund, KONE Inc.
D.J. Camp, Thyssenkrupp Elevator
H. Simpkins, *Alternate,* Thyssenkrupp Elevator
J.W. Coaker, Coaker & Co.
E.A. Donoghue, Edward A. Donoghue Assoc. Inc.
R.E. Droste, Consultant
J. Filippone, Port Authority of New York & New Jersey
J.H. Humphrey, *Alternate,* Port Authority of New York & New Jersey
C.C. Fox, Rainbow Security Cont. Ltd.
G.W. Gibson, George W. Gibson & Assoc. Inc.
H.E. Godwin Jr., State of North Carolina
R.A. Gregory, Vertex Corp.
A.P. Juhasz, KONE Inc.
L.C. Kanicki, Township of Burlington, NJ
G.A. Kappenhagen, Schindler Elevator Corp.
M.P. Lamb, *Alternate,* Schindler Elevator Corp.
A. Rehman, *Alternate,* Schindler Elevator Corp.
K.S. Lloyd Jr., Abell Elevator International
S.K. Lloyd, *Alternate,* Abell Elevator International
N.B. Martin, State of Ohio
Z.R. McCain Jr., McCain Engineering
D. McColl, Otis Canada Inc.
J.L. Meyer, CEA Engineering Services, State of California
R.L. Phillips, Georgia Dept. of Labor
V.P. Robibero, Schindler Elevator Corp.
D.L. Turner, Davis L. Turner & Associates
A.H. Verschell, Consulting Engineer
C.E. Vlahovic, TSSA
R.F. Hadaller, *Alternate,* TSSA
D.M. Winkle
D.A. Witham, Gal Manufacturing
E.A. Baker, *Alternate,* NEIEP
R.S. Caporale, *Alternate,* Elevator World Inc.
M.V. Farinola, *Alternate*
S.P. Reynolds, *Alternate,* The Peelle Co. Ltd.
R.S. Seymour, *Alternate,* Robert L. Seymour & Association

Copyright © 2004 by the American Society of Mechanical Engineers.
No reproduction may be made of this material without written consent of ASME.

ASME A17 Elevator and Escalator Committees (1995)

A17 HONORARY COMMITTEE

Geraldine A. Burdeshaw, *Staff Secretary*
Lawrence E. White
Louis Blaiotta, *Honorary Member*
Frederick W. Bowman, *Honorary Member*
William E. Chamberlain, *Honorary Member*
Bruce Fanguy, *Honorary Member*
Walter J. Figiel, *Honorary Member*
Charles E. Hempel, *Honorary Member*
Calvin L. Kort, *Honorary Member*
Attilio A. Mascone, *Honorary Member*
John McAulay, Jr., *Honorary Member*
H.E. Peelle, Jr., *Honorary Member*
Edwin M. Philpot, *Honorary Member*
Ralph L. Rogers, *Honorary Member*
Robert W. Young, *Honorary Member*

A17 REGULATORY ADVISORY COMMITTEE

Paulina Caploon
Louis C. Kanicki
Norman B. Martin
James R. Runyan

A17 NATIONAL INTEREST REVIEW GROUP

Geraldine A. Burdeshaw, *Staff Secretary*
John P. Andrew
John Antona
Lee C. Arnold
Walt Baehr
Rick Barker
Robert J. Blatz
Matthew A. Boyle
John E. Brannon
Walter J. Braun
Ted A. Bremer
Joseph A. Caluori
Michael A. Chavez
Harry J. Clifford
Robert F. Dieter
Robert C. Duncan
Samuel M. Eisenman
Brian Faerber
John J. Faup
Stephen E. Fisher
Patrick A. Fleming
John G. Gerk
Louis A. Giovannetti
Jan M. Gould
Russel E. Haukeness
Hubert H. Hayes
John E. Herwig
John Inglis
Marvin A. Jacobs
Donald J. Jolly
Frank A. Kilian
John W. Koshak
Mark L. Lane
Marino R. Liberatore
Mohammad A. Malek
James J. Mancuso
Charles C. Mann
Nickolas E. Marchitto
James M. McKinley
Rafael A. Molinari
Nicholas J. Montesano
Timothy S. Mowrey
John Murphy
Fred G. Newman
Joseph S. Nicksic
John J. O'Donoghue
Dennis J. O'Keefe III
Eugene J. Orrico III
Ajay Patel
Michael S. Peck
Babette Y. Peyton
Michael J. Pfeiffer
Raymond B. Pohlman, Jr.
Mike Poulin
John Powell
Paul M. Puno
Lee S. Rigby
Calvin W. Rogler
Ronald D. Schloss
Samuel Shanes
Mac Shipley
Harry Simpkins
Kenneth J. Smith
Michael L. Smith
Joseph L. Stabler
Robert B. Sweeney
Dee A. Swerrie
Michelle B. Taylor
Dale Tolar
Anthony W. Whaley
Dennis J. Wilson
William J. Witt
Ernest K. Zimpritsch

Copyright © 2004 by the American Society of Mechanical Engineers.
No reproduction may be made of this material without written consent of ASME.

A17 CODE COORDINATION COMMITTEE

Edward A. Donoghue, *Chair*
Geraldine A. Burdeshaw, *Staff Secretary*
Paul D. Armstrong
Louis Bialy
Davie J. Camp
Paulina Caploon
George W. Gibson
George A. Kappenhagen
Michael J. Pfeiffer
Walter Sterling
Robert D. Weber

A17 EDITORIAL COMMITTEE

Edward A. Donoghue, *Chair*
David McColl, *Vice-Chair*
Geraldine A. Burdeshaw, *Staff Secretary*
James Filippone
C.E. Vlahovic

A17 EARTHQUAKE SAFETY COMMITTEE

George W. Gibson, *Chair*
Jean Smith, *Vice-Chair*
Marissa A. Brookes, *Staff Secretary*
Davie J. Camp
Ralph E. Droste
Richard E. Fleming
Nickolas E. Marchitto
James L. Meyer
Waldir C. Ribeiro
Gerald W. Rodriguez
Anshel J. Schiff
Stefan L. Wagner, *Alternate*

A17 ELECTRICAL COMMITTEE

Andrew P. Juhasz, *Chair*
Joseph D. Busse, *Vice-Chair*
Geraldine A. Burdeshaw, *Staff Secretary*
Thomas D. Barkand
Jeffrey W. Blain
Jim Caldwell
Joseph P. Donnelly
Ralph E. Droste
Robert C. Duncan
Ricardo Elias
Stephen E. Fisher
Herschell E. Godwin Jr.
Gerard Henry
Jeffrey H. Hidaka
Yui C. Ho
Nickolas E. Marchitto
Andrei L. Peck
Raymond B. Pohlman, Jr.
Debra K. Prince
Paul M. Puno
Vincent P. Robibero
C.E. Vlahovic
Masashi Yonemoto
Don Alley, *Alternate*
Steven H. Grainer, *Alternate*
Roland F. Hadaller, *Alternate*
John D. (Doug) Henderson, *Alternate*
Tac H. Nguyen, *Alternate*
Aziz Rehman, *Alternate*
Joseph P. Rennekamp, *Alternate*
Milan Stergulc, *Alternate*
John M. Weber, *Alternate*

A17 ESCALATOR AND MOVING WALK COMMITTEE

David L. Steel, *Chair*
Edward F. Parvis, *Vice-Chair*
Robert Schaeffer, *Vice-Chair*
Riad Mohamed, *Staff Secretary*
Paul E. Burge
Patrick A. Carrajat
Frank J. Cihak
Raymond A. Dipiero
Steven H. Grainer
Patricia L. Hackett
Roland F. Hadaller
Kenneth G. Hamby
Kenneth Harris
Hubert H. Hayes
George A. Kappenhagen
Joseph W. Kenneally
Marino R. Liberatore
Jim J. Marcusky
David McColl
Thomas G. Moskai
Thomas R. Nurnberg
Daniel E. Rush
Davis L. Turner
C.E. Vlahovic
Patrick J. Welch
Carl J. White
Kyle A. Apperson, *Alternate*
David R. Evans, *Alternate*
Yasumasa Haruta, *Alternate*
Aziz Rehman, *Alternate*
Kenneth J. Smith, *Alternate*

Copyright © 2004 by the American Society of Mechanical Engineers.
No reproduction may be made of this material without written consent of ASME.

A17 HOISTWAY COMMITTEE

Louis M. Capuano, *Chair*
David McColl, *Vice-Chair*
Marissa A. Brookes, *Staff Secretary*
Louis Bialy
Louis J. Blaiotta
Davie J. Camp
Gregory B. Cassini
Frederick R. Cooper
Edward A. Donoghue
George W. Gibson
Howard J. Gruszynski
Udhe S. Kharbanda
Pierre Labadie
Marino R. Liberatore
Joseph E. Morrissey
Robert L. Phillips
Ron Quinlan
Aziz Rehman
Steven P. Reynolds
Stephen W. Smith
C.E. Vlahovic
Douglas A. Witham
Roland F. Hadaller, *Alternate*
Michael E. Jagoditz, *Alternate*
Charles F. Starmer, *Alternate*
Naveen K. Tandon, *Alternate*
Kevin Uerling, *Alternate*
James J. Urban, *Alternate*
Phillip Winey, *Alternate*

A17 HYDRAULIC COMMITTEE

George A. Kappenhagen, *Chair*
Michael G. Miller, *Vice-Chair*
Joseph Strzelec, *Vice-Chair*
Geraldine A. Burdeshaw, *Staff Secretary*
Louis Bialy
Paul E. Burge
Davie J. Camp
Clarence C. Fox
Howard A. Hammerstrom
Andrew Jahn
Neil L. Keylin
Marino R. Liberatore
David McColl
Rajendra V. Mistry
Timothy S. Mowrey
Lee S. Rigby
Calvin W. Rogler
John N. Rouse III
William M. Shrum, Jr.
Harry Simpkins
C.E. Vlahovic
Lawrence E. White
Roland F. Hadaller, *Alternate*
Aziz Rehman, *Alternate*
Eileen W. Rossman, *Alternate*
Phillip Winey, *Alternate*

A17 INCLINED ELEVATOR COMMITTEE

Alfred H. Verschell, *Chair*
Geraldine A. Burdeshaw, *Staff Secretary*
Jonathan R. Carrick
Ricardo Elias
Hubert H. Hayes

A17 INSPECTIONS COMMITTEE

Kent S. Lloyd, Jr., *Chair*
W. F. Barkman, *Vice-Chair*
Riad Mohamed, *Staff Secretary*
Richard E. Baxter
Richard J. Burke
Joseph A. Caluori
James W. Coaker
Charles E. Cunningham
Edward A. Donoghue
Michael V. Farinola
Robert T. Farley
James Filippone
Howard S. Frank
Roland F. Hadaller
Hubert H. Hayes
James T. Herrity
Norman B. Martin
Zack R. McCain, Jr.
David McColl
James L. Meyer
James D. Rosenberger
Stephen F. Sampson
Ronald D. Schloss
Robert S. Seymour
Joseph Strzelec
Raymond D. Troiano
C.E. Vlahovic
Joseph J. Knolmajer, *Alternate*
Sterrett K. Lloyd, *Alternate*

Copyright © 2004 by the American Society of Mechanical Engineers.
No reproduction may be made of this material without written consent of ASME.

A17 DUMBWAITER AND ATD COMMITTEE

Henry E. Peelle III, *Chair*
Geraldine A. Burdeshaw, *Staff Secretary*
Lee C. Arnold
Rory Dolan
Edward A. Donoghue
H.E. Peelle, Jr.
James B. Peskuski
Kirk Holdcraft, *Alternate*
Edward J. Matot II, *Alternate*

A17 MECHANICAL DESIGN COMMITTEE

George W. Gibson, *Chair*
Louis Bialy, *Vice-Chair*
Davie J. Camp, *Vice-Chair*
Marissa A. Brookes, *Staff Secretary*
Robert J. Bolen
Max Boutelle
Richard E. Fleming
Howard S. Frank
Clarence C. Fox
Roland F. Hadaller
Miles P. Lamb
Mark L. Lane
Attilio A. Mascone
David McColl
Thomas G. Moskal
Aziz Rehman
Waldir C. Ribeiro
Michelle B. Taylor
Davis L. Turner
C.E. Vlahovic
Steven P. Wurth
Giuliano Di Francesco, *Alternate*
David P. Kraft, *Alternate*
Rajendra V. Mistry, *Alternate*
Stefan L. Wagner, *Alternate*

A17 RESIDENCE ELEVATOR COMMITTEE

Alfred H. Verschell, *Chair*
Eun Sil Yoo, *Staff Secretary*
David C. Balmer
Patrick M. Bass
Kevin Brinkman
Robert G. Buonora
Paul Chance
Patrick Edwards
Ricardo Elias
Frederick M. Hoch
Mark J. Holat
Howard K. Inderdahl
Michael E. Mahoney
Marie L. McDonald
W. M. McKinley
Henry E. Peelle III
James B. Peskuski
Robert L. Phillips
Scott D. Holat, *Alternate*
Jeff C. Lund, *Alternate*
Artis Norton, *Alternate*
Stephen L. Whittenburg, *Alternate*

A17 RACK & PINION AND SPECIAL-PURPOSE PERSONNEL ELEVATOR COMMITTEE

Albert J. Marchant, *Chair*
Geraldine A. Burdeshaw, *Staff Secretary*
Edward P. Banke
Paul E. Borders
George A. Cox
John A. Harrison
Russel E. Haukeness
Thomas E. Meinen
Bernard L. O'Neill
C.E. Vlahovic
Erik Wahlberg

A17 B44.1/A17.5 COMMITTEE ON ELEVATOR AND ESCALATOR ELECTRICAL EQUIPMENT

Herschell E. Godwin Jr., *Chair*
Geraldine A. Burdeshaw, *Staff Secretary*
Jeffrey W. Blain
Alan D. Brown
Joseph D. Busse
Jim Caldwell
Bill Colavecchio
Stephen E. Fisher
Roland F. Hadaller
Martin L. Hite
Stephen J. Koinoff
Marino R. Liberatore
Richard Mackenzie
Aziz Rehman
C.E. Vlahovic
Jeffrey H. Hidaka, *Alternate*
John M. Weber, *Alternate*

Copyright © 2004 by the American Society of Mechanical Engineers.
No reproduction may be made of this material without written consent of ASME.

A17 ELEVATORS USED FOR CONSTRUCTION COMMITTEE

Richard A. Gregory, *Chair*
Geraldine A. Burdeshaw, *Secretary*
Edward A. Donoghue
Clarence C. Fox
Robert L. Phillips

A17 EMERGENCY OPERATIONS COMMITTEE

Davie J. Camp, *Chair*
Matthew Martin, *Vice-Chair*
Marissa A. Brookes, *Staff Secretary*
Merton W. Bunker, Jr.
Paulina Caploon
David Chu
Dan Cook
Edward A. Donoghue
John I. Faup
R.B. Fraser
Albert J. Gatfield
Russel E. Haukeness
Howard Ickes
Christopher Koenig
David McColl
Charles H. Murphy
Thomas F. Norton
John J. O'Donoghue
Raymond B. Pohlman, Jr.
Aziz Rehman
Lee F. Richardson
Robert L. Seymour
Samuel Shanes
Charles F. Starmer
C.E. Vlahovic
John. C. Carlson, *Alternate*
Roland F. Hadaller, *Alternate*
Douglas A. Witham, *Alternate*

A17 EVACUATION GUIDE COMMITTEE

James L. Meyer, *Chair*
Robert S. Seymour, *Vice-Chair*
Geraldine A. Burdeshaw, *Staff Secretary*
Edward A. Donoghue
Richard E. Fleming
Clarence C. Fox

A17 MINE ELEVATOR COMMITTEE

Albert Saxer, *Chair*
Thomas D. Barkand, *Vice-Chair*
Eun Sil Voo, *Staff Secretary*
Carl D. Barchet
Bruce Bertram
Paul E. Fernatt
Michael G. Kalich
David C. Lewetag
Alan L. Martin
Norman B. Martin
Harold E. Newcomb
David J. Podobinski
Jerry K. Taylor

A17 HAND AND SIDEWALK ELEVATOR COMMITTEE

Robert S. Caporale, *Chair*
Geraldine A. Burdeshaw, *Staff Secretary*
Victor G. Bahna
Edward A. Donoghue
George Greenberg
Henry J. Macuga
Nicholas J. Montesano
John P. Merkel, *Alternate*

A17 SHIPBOARD ELEVATOR COMMITTEE

Edward J. Crawford, *Chair*
Geraldine A. Burdeshaw, *Staff Secretary*
William D. George
Mark R. Tilyou

A17 INTERNATIONAL STANDARDS COMMITTEE

George W. Gibson, *Chair*
Louis Bialy, *Vice-Chair*
Geraldine A. Burdeshaw, *Staff Secretary*
Vane Q. Bates
Davie J. Camp
Robert S. Caporale
Edward A. Donoghue
Ralph E. Droste
Robert T. Farley
Andrew P. Juhasz
George A. Kappenhagen
Nickolas E. Marchitto
Vincent P. Robibero
David L. Steel
Joseph Strzelec
Davis L. Turner
Tricia Derwinski, *Alternate*

Copyright © 2004 by the American Society of Mechanical Engineers.
No reproduction may be made of this material without written consent of ASME.

A17 EXISTING INSTALLATIONS COMMITTEE

Albert Saxer, *Chair*
Lawrence M. Taylor, *Vice-Chair*
Eun Sil Yoo, *Staff Secretary*
Joseph Bera
W. C. Burklund
Jerry H. Butler
Joseph A. Caluori
Edward A. Donoghue
Michael A. Fortin
Albert P. Gallo
Richard A. Gregory
Hubert H. Hayes
Bryan R. Hines
Angelo P. Jolly
Douglas B. Labrecque
Mark L. Lane
Kent S. Lloyd, Jr.
Gary M. Losey
Zack R. McCain, Jr.
David McColl
Patrick McPartland
Joseph S. Nicksic
George Nyborg III
Floyd Padgett
Robert L. Phillips
Jerry M. Pohlman
John S. Rearick
Gene Stiffler
C.E. Vlahovic
Patrick J. Welch
Lawrence E. White
John (Jack) D. Carlisle, Jr., *Alternate*
Sterrett K. Lloyd, *Alternate*
Steven N. McGrew, *Alternate*

A17 LIMITED-USE/LIMITED-APPLICATION ELEVATOR COMMITTEE

Brian D. Black, *Chair*
David C. Balmer, *Vice-Chair*
Eun Sil Yoo, *Staff Secretary*
Patrick M. Bass
Kevin Brinkman
Robert G. Buonora
Edward A. Donoghue
Clarence C. Fox
George A. Kappenhagen
Edward J. Matot II
Marie L. McDonald
W. M. McKinley
Charles H. Murphy
Marvin W. Schumacher
Alfred H. Verschell
Robert B. Weber

A17 MAINTENANCE, REPAIR, AND REPLACEMENT COMMITTEE

Zack R. McCain, Jr., *Chair*
Richard A. Gregory, *Vice-Chair*
Eun Sil Yoo, *Staff Secretary*
Richard E. Baxter
Joseph A. Caluori
John J. De Lorenzi
Edward A. Donoghue
Michael V. Farinola
James Filippone
Roland F. Hadaller
Russel E. Haukeness
Hubert H. Hayes
Allan S. Hopkirk
John E. Jaster
Angelo P. Jolly
Douglas B. Labrecque
Kent S. Lloyd, Jr.
Gary M. Losey
David McColl
John Murphy
Joseph S. Nicksic
William B. Pletch
Art Priestman
John R. Quackenbush
John S. Rearick
Aziz Rehman
Vincent P. Robibero
Albert Saxer
Ronald D. Schloss
Joseph Strzelec
Lawrence M. Taylor
Marcus Tevyaw
C.E. Vlahovic
Michael D. Kao, *Alternate*
Sterrett K. Lloyd, *Alternate*
Steven N. McGrew, *Alternate*

Copyright © 2004 by the American Society of Mechanical Engineers.
No reproduction may be made of this material without written consent of ASME.

A18 PLATFORM LIFTS AND STAIRWAY CHAIRLIFTS COMMITTEE

Gregory L. Harmon AK, *Chair*
David C. Balmer AK, *Vice-Chair*
Eun Sil Yoo, *Staff Secretary*
Brian D. Black AF
Jonathon C. Bovis AK
Douglas W. Boydston AG
Paulina Caploon AT
Fred D. Carty AG
Neil C. Chaitin AG
Paul Chance AK
Patrick Edwards AG
Glenn E. Hedman AF
Martin Magera AI
Michael E. Mahoney AK
Marsha K. Mazz AT
Marie L. McDonald AH
James L. Meyer AT
Bill Page AK
Robert L. Phillips AT
Terry L. Pope AG
Gregg A. Rogers AE
John P. Scott AO
Mark Townsend AK
Robert B. Weber AG
Terry A. Andrus, *Alternate*
Kevin Brinkman, *Alternate*
Robert Florczyk, *Alternate*
Dave Hallman, *Alternate*
Gordon. D. Hulgan III, *Alternate*
Richard Jokela, *Alternate*
W. M. McKinley, *Alternate*
Paul M. Puno, *Alternate*
Stephen L. Whittenburg, *Alternate*

Copyright © 2004 by the American Society of Mechanical Engineers.
No reproduction may be made of this material without written consent of ASME.

Preface

This is the third edition of CSA B44.1/ASME-A17.5, *Elevator and escalator electrical equipment.* It supersedes the previous editions published in 1996 and 1991.

The purpose of CSA B44.1/ASME-A17.5 is to reduce the risk of injury to persons and damage to property from fire and electrical shock. To this end, it is a safety standard for the design and construction of equipment to be used in conformity with the rules of the applicable elevator and electrical codes (i.e., CSA B44 and C22.1 or ASME A17.1 and NFPA 70).

This joint Standard arose from the need to have identical requirements for this equipment established in a joint CSA/ASME document. This enables manufacturers to have products certified by an approved testing laboratory in the United States or Canada and have the certification ratified for acceptance in either country.

In 1986, an ad hoc committee on certification of electrical equipment, consisting of jurisdictional authorities, representatives of US and Canadian testing laboratories, and Canadian and US manufacturers, began to develop a draft for submission to the ASME A17 Elevator and Escalator Committee and the CSA B44 Technical Committee. Its initial investigation consisted of a review of the industrial control Standards CSA C22.2 No. 14 and UL 508. These Standards could not be used as such, due to the differences in the application of industrial control equipment and elevator equipment. It was recognized that industrial control equipment normally operates continuously for a low number of operations (about 3000/year) and at full-load current. In contrast, elevator control equipment operates intermittently for a high number of operations (about 500 000/year), and at up to 200 to 250% of full-load current in order to accelerate a mass. Further, elevator equipment is usually protected by either a locked machine room or a hoistway. The applicable portions of CSA C22.2 No. 14 and UL 508 were then reviewed and adapted to elevator equipment. (Grateful acknowledgement is made to Underwriters Laboratories Inc. for the use of UL 508.) Where there were differences between the UL and CSA Standards, the more stringent requirements were used.

This Standard has been approved by the CSA B44 Technical Committee on Elevator Safety Code, the CSA Strategic Steering Committee on Public Safety, and the ASME A17 Standards Committee. It is the intent of these committees to maintain a single harmonized standard by coordinating their procedures for revising and interpreting the Standard. To this end, interpretations and revisions of this Standard will not be issued without the approval of both committees.

This Standard was prepared by the CSA B44.1/ASME-A17.5 Joint Committee on Elevator and Escalator Electrical Equipment, under the jurisdiction of the CSA B44 Technical Committee on Elevator Safety Code, the CSA Strategic Steering Committee on Public Safety, and the ASME A17 Standards Committee on Elevators and Escalators, and has been formally approved by the CSA Technical Committee and the ASME Standards Committee. It will be submitted to the Standards Council of Canada for approval as a National Standard of Canada. It was approved as an American National Standard by the American National Standards Institute (ANSI) on November 8, 2004.

December 2004

Notes:

(1) *Use of the singular does not exclude the plural (and vice versa) when the sense allows.*

(2) *Although the intended primary application of this Standard is stated in its Scope, it is important to note that it remains the responsibility of the users of the Standard to judge its suitability for their particular purpose.*

(3) *This publication was developed by consensus, which is defined by* CSA Policy governing standardization — Code of good practice for standardization *as "substantial agreement. Consensus implies much more than a simple majority, but not necessarily unanimity". It is consistent with this definition that a member may be included in the Technical Committee list and yet not be in full agreement with all clauses of this publication.*

(4) *CSA Standards are subject to periodic review, and suggestions for their improvement will be referred to the appropriate committee.*

(5) *All enquiries regarding this Standard, including requests for interpretation, should be addressed to Canadian Standards Association, 5060 Spectrum Way, Suite 100, Mississauga, Ontario, Canada L4W 5N6.*

Copyright © 2004 by the American Society of Mechanical Engineers.
No reproduction may be made of this material without written consent of ASME.

Requests for interpretation should

(a) define the problem, making reference to the specific clause, and, where appropriate, include an illustrative sketch;

(b) provide an explanation of circumstances surrounding the actual field condition; and

(c) be phrased where possible to permit a specific "yes" or "no" answer.

Committee interpretations are processed in accordance with the CSA Directives and guidelines governing standardization *and are published in CSA's periodical* Info Update, *which is available on the CSA Web site at www.csa.ca.*

Copyright © 2004 by the American Society of Mechanical Engineers.
No reproduction may be made of this material without written consent of ASME.

CSA Foreword

The Canadian Standards Association (CSA) develops standards under the name Canadian Standards Association, and provides certification and testing under the name CSA International. CSA International provides certification services for manufacturers who, under license from CSA, wish to use the appropriate registered CSA Marks on certain products of their manufacture to indicate conformity with CSA Standards.

CSA Certification for a number of products is provided in the interest of maintaining agreed-upon standards of quality, performance, interchangeability and/or safety, as appropriate. Where applicable, certification may form the basis for acceptance by inspection authorities responsible for enforcement of regulations. Where feasible, programs will be developed for additional products for which certification is desired by producers, consumers, or other interests. In performing its functions in accordance with its objectives, CSA does not assume or undertake to discharge any responsibility of the manufacturer or any other party. The opinions and findings of the Association represent its professional judgement given with due consideration to the necessary limitations of practical operation and state of the art at the time the Standard is processed.

Products in substantial accord with this Standard but which exhibit a minor difference or a new feature may be deemed to meet the Standard providing the feature or difference is found acceptable utilizing appropriate CSA International Operating Procedures. Products that comply with this Standard shall not be certified if they are found to have additional features which are inconsistent with the intent of this Standard. Products shall not be certifiable if they are discovered to contravene applicable laws or regulations.

Testing techniques, test procedures, and instrumentation frequently must be prescribed by CSA International in addition to the technical requirements contained in Standards of CSA. In addition to markings specified in the Standard, CSA International may require special cautions, markings, and instructions that are not specified by the Standard.

Some tests required by CSA Standards may be inherently hazardous. The Association neither assumes nor accepts any responsibility for any injury or damage that may occur during or as the result of tests, wherever performed, whether performed in whole or in part by the manufacturer or the Association, and whether or not any equipment, facility, or personnel for or in connection with the test is furnished by the manufacturer or the Association.

Manufacturers should note that, in the event of the failure of CSA International to resolve an issue arising from the interpretation of requirements, there is an appeal procedure: the complainant should submit the matter, in writing, to the Secretary of the Canadian Standards Association.

If this Standard is to be used in obtaining CSA Certification please remember, when making application for certification, to request all current Amendments, Bulletins, Notices, and Technical Information Letters that may be applicable and for which there may be a nominal charge. For such information or for further information concerning CSA Certification, please address your inquiry to Applications and Customer Service, CSA International, 178 Rexdale Boulevard, Toronto, Ontario, Canada M9W 1R3.

ASME Form and Arrangement

The Preface, Foreword, Notes accompanying clauses, and Annexes that are included in this document and the Interpretations that are provided as a separate booklet are not part of this Standard. They are advisory in nature and are intended for clarification only. Notes to tables and figures are considered part of the table or figure and are written as requirements.

Copyright © 2004 by the American Society of Mechanical Engineers.
No reproduction may be made of this material without written consent of ASME.

CSA B44.1-04/ASME-A17.5-2004
Elevator and escalator electrical equipment

1 Scope

1.1
The requirements of this Standard apply to the following electrical equipment for elevators, escalators, moving walks, dumbwaiters, material lifts, and elevating devices for persons with physical disabilities (platform lifts and stairway chairlifts):
(a) motor controllers;
(b) motion controllers;
(c) operation controllers;
(d) operating devices; and
(e) all other electrical equipment not listed/certified and labelled/marked according to another product safety standard or code.

The equipment specified in this Standard is intended for installation in accordance with the *Canadian Electrical Code, Part I* (CSA C22.1) and the *National Electrical Code* (NFPA 70), whichever is applicable.
Note: *Controllers, i.e., motion, motor, and operation controllers, are defined in CSA B44 and ASME A17.1.*

1.2
The electrical equipment covered by this Standard is intended
(a) to be connected to supply circuits at a nominal system voltage of 600 V or less;
(b) for internal voltages that are not more than 1500 V; and
(c) for use in non-hazardous locations in accordance with the rules of the applicable electrical codes.

1.3
The object of this Standard is to reduce the risk of injury to persons and damage to property from fire and electrical shock by presenting requirements for the proper design, the good construction, and the high quality of work of the equipment listed in Clause 1.1.

1.4
This Standard does not apply to devices that are rated for connection to extra-low-voltage Class 2 supply circuits as defined in the applicable electrical code.
Note: *Extra-low-voltage circuits are circuits that have a voltage of not more than* 30 V *rms or* 42.4 V *peak.*

1.5
In CSA Standards, "shall" is used to express a requirement, i.e., a provision that the user is obliged to satisfy in order to comply with the standard; "should" is used to express a recommendation or that which is advised but not required; "may" is used to express an option or that which is permissible within the limits of the standard; and "can" is used to express possibility or capability. Notes accompanying clauses do not include requirements or alternative requirements; the purpose of a note accompanying a clause is to separate from the text explanatory or informative material. Notes to tables and figures are considered part of the table or figure and may be written as requirements. Annexes are designated normative (mandatory) or informative (non-mandatory) to define their application.

Copyright © 2004 by the American Society of Mechanical Engineers.
No reproduction may be made of this material without written consent of ASME.

1.6
SI (metric) units are the primary units of measure in this Standard. The yard/pound (imperial) units in the text have been directly (soft) converted from the SI units.

2 Reference publications and abbreviations

2.1 Reference publications
This Standard refers to the following publications, and where such reference is made, it shall be to the edition listed below, including all amendments published thereto.

CSA (Canadian Standards Association)
B44-00
Safety Code for Elevators

C22.1-02
Canadian Electrical Code, Part I

CAN/CSA-C22.2 No. 0-M91 (R2001)
General Requirements — Canadian Electrical Code, Part II

C22.2 No. 0.2-93 (R1999)
Insulation Coordination

C22.2 No. 0.4-M1982 (R1999)
Bonding and Grounding of Electrical Equipment (Protective Grounding)

CAN/CSA-C22.2 No. 0.17-00
Evaluation of Properties of Polymeric Materials

C22.2 No. 14-95 (R2001)
Industrial Control Equipment

CAN/CSA-C22.2 No. 94-M91 (R2001)
Special Purpose Enclosures

ANSI/IEEE (American National Standards Institute/Institute of Electrical and Electronics Engineers)
IEEE-4-1995
Standard Techniques for High-Voltage Testing

ANSI/NFPA (American National Standards Institute/National Fire Protection Association)
NFPA 70-2002
National Electrical Code

ANSI/UL (American National Standards Institute/Underwriters Laboratories Inc.)
50 (1995)
Cabinets and Boxes

94 (1996)
Flammability of Plastic Materials for Parts in Devices and Appliances

Copyright © 2004 by the American Society of Mechanical Engineers.
No reproduction may be made of this material without written consent of ASME.

840 (1994)
Standard for Safety for Insulation and Coordination Including Clearances and Creepage Distances for Electrical Equipment

ASME (American Society of Mechanical Engineers)
A17.1-2000
Safety Code for Elevators and Escalators

UL (Underwriters Laboratories Inc.)
508 (1999)
Standard for Industrial Control Equipment

746C (2001)
Standard for Polymeric Materials — Use in Electrical Equipment Evaluations

796 (1999)
Standard for Printed Wiring Boards

2.2 Abbreviations

The following abbreviations apply in this Standard:

Abbreviation	Unit
A	ampere
ac	alternating current
AWG	American wire gauge
°C	degree Celsius
CTI	comparative tracking index
dc	direct current
deg.	degree (angle)
°F	degree Fahrenheit
ft	foot
ft-lbf	foot pound force
h	hour
hp	horsepower
Hz	hertz
in	inch
J	joule
kcmil	kilo circular mil
kg	kilogram
kV	kilovolt
kVA	kilovolt ampere
lb	pound (mass)
lbf	pound (force)
lbf-in	pound force inch
mm	millimetre
μs	microsecond
N	newton (force)
Nm	newton metre (torque)
rms	root mean square
s	second
V	volt
VA	volt-ampere

Copyright © 2004 by the American Society of Mechanical Engineers.
No reproduction may be made of this material without written consent of ASME.

3 Construction

3.1

Electrical components used in control equipment shall be suitable for the intended application and shall be either

(a) certified to the requirements of the pertinent standards covering such components; or
(b) specifically evaluated for the intended use.

3.2

Components for electronic circuits such as solid-state devices (SCRs, diodes, etc.), resistors, and capacitors for which there are no appropriate standards may be accepted as components based on examination (quality of work, electrical spacings, etc.) and testing.

4 Enclosure construction

4.1 General

4.1.1

The enclosure of control equipment shall be constructed and assembled so that it will have the strength and rigidity necessary to resist the abuses to which it is likely to be subjected, without resulting in a hazard due to reduction of spacings, loosening or displacement of parts, or other serious defects.

4.1.2

An enclosure shall be constructed so as to reduce the risk of unintentional contact with enclosed electrical devices.

4.2 Thickness of cast-metal enclosures for live parts

A cast-metal enclosure of malleable iron and die-cast metal or permanent mould cast aluminum, brass, bronze, or zinc shall be used. It shall be

(a) not less than 2.4 mm (0.094 in) thick for an area that is greater than 15 500 mm^2 (24 in^2) or that has a dimension greater than 150 mm (6 in);
(b) not less than 1.6 mm (0.063 in) thick for an area that is 15 500 mm^2 (24 in^2) or less and that has no dimensions greater than 150 mm (6 in). The area limitation may be obtained by the provision of suitable reinforcing ribs subdividing a larger area; and
(c) not less than 3.2 mm (0.125 in) at reinforcing ribs, door edges, and unthreaded conduit entries.

Thicknesses may be reduced if the enclosure complies with the requirements of the impact test of Clause 19.5 of this Standard and the conduit connection tests of CSA C22.2 No. 14 or UL 508.

4.3 Thickness of sheet-metal enclosures for live parts

4.3.1

Except as specified in Clause 4.3.2, the thickness of sheet-metal enclosures shall be not less than that specified in Tables 1 and 2, except that at the points at which a wiring system will be connected, uncoated steel shall be at least 0.78 mm (0.032 in) thick, zinc-coated steel at least 0.88 mm (0.034 in) thick, and non-ferrous metal at least 1.16 mm (0.045 in) thick.

4.3.2

The thickness of sheet metal for enclosures at points other than those at which a wiring system will be connected need not comply with the thickness requirements of Clause 4.3.1 if the enclosure complies with the compression and deflection test requirements in Clauses 19.8 and 19.9.

Note: *Tables 1 and 2 are based on a uniform deflection of the enclosure surface for any given load concentrated at the centre of the surface, regardless of metal thickness.*

Copyright © 2004 by the American Society of Mechanical Engineers.
No reproduction may be made of this material without written consent of ASME.

4.3.3
With reference to Tables 1 and 2, a supporting frame shall consist of a structure of angles, channels, or folded rigid sections of sheet metal. This structure shall be rigidly attached to and shall have essentially the same outside dimensions as the enclosure surface and sufficient torsional rigidity to resist the bending moments that may be applied by the enclosure surface when it is deflected. A structure that is as rigid as one built with a frame of angles or channels is considered to have equivalent reinforcing. Constructions without a supporting frame shall be considered to include
(a) a single sheet with single-formed flanges or formed edges;
(b) a single sheet that is corrugated or ribbed;
(c) an enclosure surface loosely attached to a frame (e.g., with spring clips); and
(d) an enclosure surface having an unsupported edge.

5 Doors and covers

5.1
A part of the enclosure, such as a door or a cover, shall be provided with the means, such as latches or screws, to firmly secure it in place.

5.2
Barriers shall be installed to prevent contact with live parts if inadvertent contact with bare live parts during normal service and adjustment operation is considered probable.
Note: *Troubleshooting or the replacement of fuses is not considered a normal service adjustment operation with respect to control equipment, but the resetting of overload devices, adjustment of timers or switches, etc., are considered normal service operations.*

6 Polymeric enclosures

6.1
Polymeric enclosures shall comply with the conduit connection test of CSA C22.2 No. 14 or UL 508.

6.2
The thickness of a polymeric enclosure shall be such that the enclosure is sufficiently rigid to support the device and components that will be mounted on it.

6.3

6.3.1
Polymeric enclosure material shall be rated 5 VA (in accordance with CAN/CSA-C22.2 No. 0.17 or ANSI/UL 94) or the enclosures shall comply with the requirements of Clause 6.3.2 of this Standard after testing in accordance with Clause 6.3.3 or 6.3.4 of this Standard.

6.3.2
To fulfill the requirements of the tests specified in Clause 6.3.3 or 6.3.4,
(a) the enclosure material shall not continue to burn for more than 60 s after the fifth application of the test flame;
(b) particles shall not drip from the test sample at any time during the test; and
(c) the material shall not be destroyed in the area of the test flame to the extent that the integrity of the enclosure is affected as determined by Clauses 4.1, 4.2, and 7.1.

Copyright © 2004 by the American Society of Mechanical Engineers.
No reproduction may be made of this material without written consent of ASME.

6.3.3
Enclosure material shall
(a) fulfill the requirements of the 125 mm (5.0 in) flame test, "Flame Test B — Flame Test for Combustion-Resistant Materials", in Clause D2 of CAN/CSA-C22.2 No. 0.17, except that the maximum burning time after each application shall be 60 s; and
(b) not ignite within 15 s, when subjected to the hot-wire ignition test of CAN/CSA-C22.2 No. 0.17 or ANSI/UL 94.

6.3.4
Enclosures shall be tested in accordance with the 125 mm (5.0 in) flame test, "Flame Test A — 125 mm Flame Test", in Clause D1 of CAN/CSA-C22.2 No. 0.17 or the flame test for combustion-resistant materials in ANSI/UL 94.

6.4

6.4.1
Polymeric enclosure materials outside a protective or fire enclosure (decorative) shall be classified HB or better.
Note: *See CAN/CSA-C22.2 No. 0.17 or ANSI/UL 94 for identification of the material classifications.*

6.4.2
A non-metallic plug or other closure means assembled to a sheet-metal box as part of the enclosure shall be considered acceptable under any one of the following conditions:
(a) the maximum area is 645 mm^2 (1.0 in^2) and the closure material is classified as V-0, V-1, or V-2;
(b) the maximum area is 645 mm^2 (1.0 in^2), the closure material is classified as HB, and the closure complies with the flame test requirements in Clause 6.3;
(c) the maximum area is 5800 mm^2 (9 in^2), the closure material is classified as V-0, V-1, V-2, or HB, and the closure material is used as a pilot light lens; or
(d) the area is more than 645 mm^2 (1.0 in^2), the closure material is classified as V-0, V-1, V-2, or HB, and the closure means complies with the flammability and impact test requirements in Clauses 6.3 and 6.5.
Note: *See CAN/CSA-C22.2 No. 0.17 or ANSI/UL 94 for identification of the material classifications.*

6.5
Samples of equipment shall be subjected to the impact tests described in Clauses 19.5.1 and 19.5.2. The impact shall not
(a) reduce spacings below the minimum acceptable values;
(b) make any bare live parts or internal wiring accessible to contact;
(c) have an undue adverse effect on the insulation; and
(d) produce any other condition that can increase the risk of shock, fire, or damage to the equipment.

6.6
An enclosure employing insulating material, either wholly or in part, shall be provided with a suitable bonding means to ensure continuity of grounding between all conduit openings and any external metal parts that can become energized. The suitable bonding means shall be either completely fitted to the product or provided as separate parts for field installation. An enclosure designed for field assembly of the bonding means shall be provided with complete instructions to ensure proper installation. The instructions shall include the identification of the parts (see Clause 20.5) and their method of installation.

6.7
Notwithstanding Clause 6.6, bonding shall not be required for enclosures of end-of-line auxiliary devices where there are no exposed metal parts that can become energized and where, if necessary, the enclosures are marked to indicate that only one conduit is to be connected to the enclosure.

Copyright © 2004 by the American Society of Mechanical Engineers.
No reproduction may be made of this material without written consent of ASME.

6.8
A separate bonding conductor shall be copper, a copper alloy, or other material suitable for use as an electrical conductor. Ferrous metal parts in the grounding path shall be suitably protected against corrosion by enamelling, galvanizing, plating, or other equivalent means. A separate bonding conductor shall

(a) be protected from mechanical damage or be located within the confines of the outer enclosure or frame; and
(b) not be secured by a removable fastener used for any purpose other than bonding. The ends of the bonding conductor shall be in metal-to-metal contact with the parts to be bonded.

6.9
The size of a separate component bonding conductor shall be not less than that specified in Table 3 or the size of the conductor supplying the component, whichever is smaller. Notwithstanding this requirement, the bonding conductor may be of smaller size than that specified in Table 3 but not less than the size of the conductor supplying the component, provided that the bonding complies with the requirements of the applicable bonding and grounding standards.

7 Openings in enclosures

7.1
To reduce the likelihood of unintentional contact involving a risk of electric shock from an uninsulated live part or film-coated wire, or a risk of injury to personnel from a moving part, an opening in an enclosure shall comply with either of the following:

(a) for an opening that has a minor dimension (see Clause 7.4) less than 25.4 mm (1.0 in), such a part or wire shall not be contacted by the probe illustrated in Figure 1; or
(b) for an opening that has a minor dimension of 25.4 mm (1.0 in) or more, such a part or wire shall be distanced from the opening as specified in Table 4.

7.2
The probe mentioned in Clause 7.1 and illustrated in Figure 1 shall be applied to any depth that the opening will permit. It shall be rotated or angled before, during, and after insertion through the opening to any position that is necessary to examine the enclosure.

7.3
The probe mentioned in Clauses 7.1, 7.2, and 7.4 shall be used as the measuring instrument to judge the accessibility provided by an opening. The probe shall not be used as an instrument to judge the strength of a material. The probe shall be applied with a force sufficient to ensure full insertion but not greater than 11 N.

7.4
With reference to the requirements in Clause 7.1, the minor dimension of an opening is the diameter of the largest cylindrical probe having a hemispherical tip that can be inserted through the opening.

7.5
Electrical equipment shall be so constructed that molten or flaming particles cannot fall to the surface on or over which the equipment is mounted.

7.6
Notwithstanding Clause 7.5, floor-mounted equipment shall be permitted to be marked in accordance with Clause 20.11.

Copyright © 2004 by the American Society of Mechanical Engineers.
No reproduction may be made of this material without written consent of ASME.

7.7
Coverings may be omitted from the bottom of a floor-mounted enclosure if
(a) the enclosure extends to the floor, with live parts mounted in the enclosure in accordance with Table 5; or
(b) the control equipment is rated 600 V or less, the enclosure is within 152 mm (6.0 in) of the floor, and the bare live parts of the device are not less than 152 mm (6.0 in) above the lower edge of the enclosure.

7.8
The diameter of the wires of a screen shall be not less than 1.3 mm (0.051 in) if the screen openings are 320 mm^2 (0.5 in^2) or less in area, and shall be not less than 2.06 mm (0.0811 in) for larger screen openings.

7.9
Perforated sheet steel and sheet steel employed for expanded metal mesh shall be not less than 1.07 mm (0.042 in) thick for mesh openings or perforations 320 mm^2 (0.5 in^2) or less in area, and shall be not less than 2.03 mm (0.080 in) thick for larger openings. In a small device, where the indentation of a guard enclosure will not alter the clearance between uninsulated, movable, live parts and grounded metal so as to adversely affect the performance or reduce spacings below the minimum values specified in Table 5, expanded metal mesh not less than 0.51 mm (0.020 in) thick may be employed, provided that
(a) the exposed mesh on any one side or surface of the device has an area of not more than 46 500 mm^2 (72 in^2) and has no dimension greater than 305 mm (12 in); or
(b) the width of an opening is not greater than 88 mm (3.5 in).

7.10
Glass covering an observation opening and forming a part of the enclosure shall be reliably secured in such a manner that it cannot be readily displaced in service and it provides mechanical protection for the enclosed parts. Glass covering an opening not more than 100 mm (4 in) in any dimension shall be not less than 1.4 mm (0.055 in) thick, and glass covering an opening having no dimension greater than 305 mm (12 in) shall be not less than 2.92 mm (0.115 in) thick. Glass used to cover larger openings shall be of the clear safety type or wire-reinforced type.

8 Wire-bending space

8.1
The wire-bending space at a field wiring terminal shall be measured from the centre of the conductor opening on the face of the wire connector to the enclosure wall opposite the terminal, in the line in which the wire leaves the connector when the connector is at the smallest angle to the perpendicular of the enclosure wall that it can assume without defeating any reliable means provided to prevent it from turning. A connector shall not be directed toward a corner or a recess in an enclosure to obtain the required bending space. The wire-bending space shall be as specified in Table 6.

8.2
If a wire is restricted by a barrier or obstruction from being bent in a single 90° or S bend between the terminal and any permitted enclosure entrance point, the wire-bending space shall be measured from the end of the barrier or obstruction to the wall towards which the wire is directed, in a line perpendicular to the wall.

8.3
A barrier, shoulder, or the like shall be disregarded when the measurement is being made if it does not reduce the radius to which the wire must be bent.

Copyright © 2004 by the American Society of Mechanical Engineers.
No reproduction may be made of this material without written consent of ASME.

8.4
The wire size used to determine the wire-bending space shall be determined as described in CSA C22.2 No. 14 or UL 508.

9 Special-purpose enclosures
Special-purpose enclosures for non-hazardous locations shall comply with the requirements of CAN/CSA-C22.2 No. 94 or ANSI/UL 50.

10 Protection against corrosion
Ferrous metals shall be suitably protected against corrosion as required by CAN/CSA-C22.2 No. 0 or UL 508.

11 Insulating material

11.1
Material for the support of an uninsulated live part shall be porcelain, phenolic, cold-moulded composition, unfilled nylon, melamine, melamine-phenolic, urea formaldehyde, or other material found acceptable for the support of an uninsulated live part.

These materials shall withstand the most severe conditions likely to be met in service.

11.2
The insulation material shall be classified as V-0, V-1, V-2, or HB.

Note: *See CAN/CSA-C22.2 No. 0.17 or ANSI/UL 94 for identification of the material classifications.*

11.3
Insulating material, including barriers between parts of opposite polarity and material that can be subject to the influence of the arc formed by the opening of a switch, shall be suitable for the particular application. Materials shall not be adversely affected by the overload and endurance tests.

11.4
A printed wiring board and any coating material that is provided shall not increase the flammability of the assembly.

12 Protective devices

12.1
Protective devices shall be provided for motor branch circuit overcurrent protection, ground-fault protection, and motor running overload protection where required by the applicable electrical code.

12.2
The number, arrangement, and ratings or settings of protective devices used in control equipment shall be in accordance with the requirements of the applicable electrical code.

Copyright © 2004 by the American Society of Mechanical Engineers.
No reproduction may be made of this material without written consent of ASME.

13 Protection of control circuits

13.1 Control circuit conductor protection

Conductors of control circuits that are connected to the load side of the motor branch circuit short-circuit protective device (common control) and that extend beyond the control equipment enclosure shall be protected against overcurrent, in accordance with their ampacities, by protective devices located within the controller; otherwise, the controller shall be marked in accordance with Clause 20.19. Additional protection or additional marking shall not be required if the rating or setting of the intended motor branch circuit short-circuit protective device is not more than 300% of the ampacity (15 A minimum) of the control circuit conductors.

13.2 Control circuit transformer protection

13.2.1

A control circuit transformer shall be provided with one or more of the following types of overcurrent protection:

(a) individual overcurrent devices located in the primary circuit that are rated or set as specified in Table 7;

(b) secondary circuit protection rated or set at not more than 125% of the rated secondary current of the transformer, with the protection of the primary feeder circuit rated or set at not more than 250% of the rated primary current of the transformer; or

(c) coordinated thermal overload protection arranged to interrupt the primary circuit, provided that the primary circuit overcurrent device is rated or set at a current of not more than
   (i) six times the rated current of the transformer for transformers having not more than 6% impedance; or
   (ii) four times the rated current of the transformer for transformers having more than 6% but less than 10% impedance.

13.2.2

Notwithstanding Clause 13.2.1, overcurrent protection need not be provided if the

(a) transformer supplies a Class 2 circuit;

(b) transformer is rated less than 50 VA and is an integral part of the motor controller, and there is no fire hazard (emission of flame or molten material) with a short-circuit on the secondary;

(c) primary feeder circuit overcurrent device provides the required protection; or

(d) protection is provided by other means that comply with the applicable electrical code.

13.2.3

Notwithstanding Clause 13.2.1(b), if the rated secondary current of the transformer is 2 A or more, the current rating of the secondary overcurrent device may be as indicated in line 2 or 3 of Table 7, as applicable.

13.2.4

If the rated primary current of the transformer is 9 A or more and 125% of this current does not correspond to a standard rating of a fuse or non-adjustable circuit breaker, the next higher standard rating of protective device shall be used.

13.2.5

A control transformer and its primary and secondary conductors may be protected by overcurrent devices located in the primary circuit, provided that the

(a) transformer is single-phase and has only a 2-wire (single voltage) secondary;

(b) maximum value of an intended overcurrent device is determined in accordance with Clause 13.2.1; and

Copyright © 2004 by the American Society of Mechanical Engineers.
No reproduction may be made of this material without written consent of ASME.

(c) maximum value of an intended overcurrent device as determined in Item (b) does not exceed the value of the overcurrent device obtained from Table 7 for the secondary conductor multiplied by the secondary-to-primary voltage ratio of the transformer.

14 Internal wiring

14.1

Insulated conductors shall be types suitable for the service intended with respect to voltage, temperature, and grouping. Conductors shall be not smaller than No. 24 AWG, and the temperature rating shall be not less than 90 °C (194°F) unless investigation proves the suitability of other conductors.

Notes:

(1) *The requirements of Clause 14.1 apply only to the wiring furnished on or in control equipment. They do not apply to the supply wiring that is run to control equipment, to motors, or to other apparatus.*

(2) *For motor and control circuit applications, the use of Tables 8 and 9 as a guide in selecting conductor sizes for control equipment can obviate the need to perform a temperature test on the wire. Conductor sizes for other applications (e.g., heating loads) are subject to investigation.*

14.2

Notwithstanding Clause 14.1, conductors smaller than No. 24 AWG may be used for wiring of printed circuit boards and interconnecting wiring between electronic modules and subassemblies.

14.3

Conductors in an assembly intended for use in a complete enclosure shall be insulated for the highest voltage normally occurring between such conductors unless

(a) the wires are grouped so as to segregate the several voltages; or

(b) the circuits involving the wires rated at the lower voltage(s) do not extend beyond the complete enclosure.

14.4

Wires shall be supported or secured or otherwise run in suitable raceways so that they will not come into contact with moving parts or rest on sharp edges or projections that can cause abrasion of the insulation. Wires shall be of flexible or extra-flexible construction where they make connections to electrical equipment mounted on a hinged door. If the flexing section of the wiring is liable to come into contact with grounded metal parts, that portion of the wiring shall be given additional protection by wrapping of tape or the equivalent or by enclosure in non-metallic flexible tubing or conduit.

14.5

Internal wiring shall not be in contact with bare live parts of opposite polarity or with bare live parts of other circuits.

14.6

A bare conductor, including pigtails and coil leads, if it is not covered by acceptable insulating sleeving or tubing, shall be supported so that the spacings required elsewhere in this Standard will be maintained.

Copyright © 2004 by the American Society of Mechanical Engineers.
No reproduction may be made of this material without written consent of ASME.

15 Wiring terminals and leads

15.1

Control equipment shall be provided with wiring terminals or leads for connection of conductors having an ampacity not less than the largest of the following:

(a) the ampere rating of the equipment;

(b) 125% of the full-load motor current specified in Table 10 or 11 for the horsepower rating or, in the case of power-conversion equipment in which the input current is different from motor full-load current, 125% of maximum rated input current;

(c) 125% of the resistive ampere rating of the devices intended to control fixed electric space-heating equipment loads; and

(d) for equipment controlling a direct-current motor intended to be operated from a rectified single-phase power supply,

(i) 190% of full load current if a half-wave rectifier is used; or

(ii) 150% of full load current if a full-wave rectifier is used.

Note: *Item (d) does not apply if the product is marked in accordance with Clause 20.18.*

15.2

A device having a current rating or an hp rating with a full-load motor-running current as specified in Table 10 or 11 shall be provided with wiring terminals or leads for connections to wire of a size determined in accordance with the applicable electrical code. The size shall be based upon a wire suitable for a temperature of 60 °C (140°F) for a rating of 100 A or less, and upon a wire suitable for 75 °C (167°F) for a rating greater than 100 A. The type of insulation is not specified.

15.3

A lead that is intended to be spliced to a circuit conductor in the field shall be not smaller than No. 24 AWG, and the insulation, if of rubber or thermoplastic, shall be not less than 0.8 mm (0.031 in) thick.

15.4

Terminal parts for field wiring connections shall conform to the requirements of CAN/CSA-C22.2 No. 0 or UL 508, except that for a No. 10 AWG or smaller conductor, the terminal to which wiring connections are made may consist of clamps or binding screws, and a terminal plate with upturned lugs or the equivalent to hold the wires in position.

15.5

A wire-binding screw to which field wiring connections are made shall be not smaller than No. 8, except that a No. 5 screw may be used at a terminal intended only for connection of a No. 14 AWG or smaller conductor and a No. 6 screw may be used at a terminal intended only for connection of a No. 12 AWG or smaller conductor.

15.6

A terminal plate tapped for a wire binding screw shall be of metal not less than 0.76 mm (0.030 in) thick for a No. 14 AWG or smaller wire, and not less than 1.27 mm (0.050 in) thick for a wire larger than No. 14 AWG. There shall be not fewer than 2 full threads in the plate. Two full threads shall not be required if fewer threads result in a secure connection in which the threads will not strip upon application of a 2.3 Nm (20 lbf-in) tightening torque.

15.7

A terminal plate formed from stock having the minimum required thickness specified in Clause 15.6 may have the metal extruded at the tapped hole for the binding screw to provide two full threads.

Copyright © 2004 by the American Society of Mechanical Engineers.
No reproduction may be made of this material without written consent of ASME.

15.8

15.8.1
Control equipment intended for cord connection to the power supply shall be provided with a suitable length, size, and type of hard-usage cord (see CSA C22.1); junior hard service cord (see ANSI/NFPA 70); extra-hard-usage cord (see CSA C22.1); hard service cord (see ANSI/NFPA 70); or the equivalent permitted by the applicable elevator or electrical code, which shall terminate in an appropriate attachment plug.

15.8.2
Strain relief shall be provided so that a mechanical stress on the cord will not be transmitted to terminals, splices, or internal wiring. At the point at which the cord passes through the enclosure wall, protection shall be provided to prevent cord abrasion. The equipment shall withstand damage to the cord or conductors and shall withstand, without displacement, the test specified in Clause 19.10.

16 Electrical spacings

16.1
Except as required by Clause 16.2 or as permitted by Clause 16.27, electrical spacings in control equipment shall be not less than those specified in Table 5. On printed circuit boards, the spacings of Table 12 may apply.

16.2
The electrical spacings in control equipment in which transient voltages are known and controlled by a suitable transient suppression device shall be not less than those specified in Table 13, except the spacings at a field wiring terminal shall be in accordance with Table 5 and Clause 16.12.

16.3
The transient suppression device specified in Clause 16.2 shall prevent peak transient voltages from exceeding 300% of the instantaneous peak working voltage or 300 V, whichever is greater. See Clause 19.7.

16.4
With reference to the requirements in Clauses 16.2 and 16.3, control equipment shall have provision for the maintenance of clean, dry electrical surfaces, such as a suitable conformal coating on a printed wiring board, or shall have other means of protecting equipment from atmospheres containing dust.

16.5
The spacing at a field wiring terminal shall be measured with wire connected to the terminal as in service. The connected wire for a programmable controller shall be the size that is normally required for the equipment rating. The connected wire for all devices other than a programmable controller shall be the next larger size than that normally required for the equipment rating if the terminal will accommodate it or if the equipment is not marked to restrict its use.

16.6
The spacings specified in Group B of Table 5 shall apply to
(a) devices rated 1 hp or equivalent FLA or less, 720 VA or less (break pilot duty), or not more than 15 A at 51 to 150 V, 10 A at 151 to 300 V, or 5 A at 301 to 600 V, or any combination thereof;
(b) the same devices as described in Item (a) when multi-pole and controlling more than one load, provided that the total load connected to the line at one time does not exceed 2 hp, 1440 VA, or have a current rating greater than 30 A at 51 to 150 V, 20 A at 151 to 300 V, or 10 A at 301 to 600 V, and provided also that the loading on any one pole does not exceed its marked rating; and
(c) manual motor controllers rated 1 hp and less.

Copyright © 2004 by the American Society of Mechanical Engineers.
No reproduction may be made of this material without written consent of ASME.

16.7

The spacings in Group C of Table 5 apply to devices rated at 300 V or less and 1 hp or less or 2000 VA or less per pole.

Note: *A switching device may also have a supplementary current rating (per pole) of* 15 A *or less at* 51 *to* 150 V *or* 10 A *at* 151 *to* 300 V, *or both.*

16.8

The spacings of Group C of Table 5 shall also apply to magnetically operated switches that are not rated in horsepower and that have current ratings per pole not greater than 15 A at 51 to 150 V or 10 A at 151 to 300 V, or both.

16.9

Spacings shall be the subject of investigation in devices connected in circuits where

(a) the power is limited by a transformer, rectifier, voltage divider, or similar device (overload devices and fuses are excluded);
(b) the short-circuit limit between conductors or between conductors and ground is 1500 VA or less; and
(c) a fire hazard will not result from a short-circuit.

Note: *For the purposes of Clause 16.9, the short-circuit VA limit is the product of the open-circuit volts and the short-circuit amperes, and these are rms values in an ac circuit.*

16.10

A motor controller rated more than 1 hp at 151 to 300 V and complying with the spacings specified in Group A of Table 5 for such rating may have an additional rating of 1 hp or less at 301 to 600 V. See also Clause 16.6 for multi-pole devices.

16.11

A motor controller rated more than 1 hp at 51 to 150 V and complying with the spacings specified in Group A of Table 5 for such rating may have an additional rating of 1 hp or less at 151 to 300 V. See also Clause 16.6 for multi-pole devices.

16.12

In a circuit involving voltages of 50 V or less, other than as noted in Clause 16.14, spacings at field wiring terminals may be 3.2 mm (0.125 in) through air and 6.3 mm (0.248 in) over surface; spacings elsewhere may be 1.6 mm (0.063 in) through air or over surface, provided that the insulation and clearances between such circuits and any circuits of more than 50 V are in accordance with the requirements for the higher voltage circuit. Spacings are not specified for a circuit involving a voltage of not more than 30 V and supplied by

(a) a primary battery;
(b) a standard Class 2 transformer; or
(c) a suitable combination of transformer and fixed impedance having output characteristics in compliance with those required for a Class 2 transformer.

16.13

For a pilot light consisting of a lampholder in series with a dropping resistor or connected to an autotransformer, the spacings shall be

(a) not less than 1.2 mm (0.047 in) between bare live parts of opposite polarity at or within a lampholder (an inherent lampholder spacing) rated 250 V or less and not less than 3.2 mm (0.125 in) for a lampholder rated more than 250 V;
(b) not less than those specified in Table 5 or in Clause 16.12 between uninsulated live parts of opposite polarity (other than at or within the lampholder) based on the normal operating voltage existing between such parts; and
(c) not less than those specified in Table 5 between bare live parts and grounded parts, exposed non-current-carrying metal parts, or the enclosure, based on the line voltage of the pilot light circuit.

Copyright © 2004 by the American Society of Mechanical Engineers.
No reproduction may be made of this material without written consent of ASME.

16.14
In a series circuit, the spacings between resistor terminals, transformer taps, and the like shall be based on the normal operating voltage existing between such parts.

16.15
In a push-button switch, selector switch, limit switch, or the like, opposite polarity shall not be considered to exist on any one pole, including switches with double-throw arrangements, but opposite polarity shall be considered to exist between poles and between live parts on adjacent units unless the parts in question are connected to the same line terminal or conductor or marked to indicate the same polarity.

16.16
The spacings at fuses and fuseholders, measured with the fuses in place, shall be determined using fuses that have the maximum standard dimensions, and the spacings shall be not less than those specified in Group A of Table 5.

16.17
A ceramic, vitreous-enamel, or similar coating shall not be acceptable as insulation in place of spacings unless, upon investigation, the coating is found to be uniform, reliable, and otherwise suitable for the purpose.

16.18
If contact arms, blades, etc., in a motor controller remain connected to the motor load terminals when in the OFF position, the spacing from such parts in the OFF position to the enclosure or to exposed non-current-carrying metal parts that are isolated and/or insulated shall be not less than 3.2 mm (0.125 in) plus the spacings required otherwise.

16.19
Enamelled or similar film-coated wire shall be considered to be a bare live part when determining compliance with the spacing requirements in this Standard.

16.20
An insulating barrier or liner used as the sole separation between a bare live part and a grounded non-current-carrying metal part, including the enclosure, or between bare live parts of opposite polarity shall be of a material that is suitable for the mounting of bare live parts and shall be not less than 0.71 mm (0.028 in) thick. Fibre less than 0.71 mm (0.028 in) thick may be used as the sole separation between the enclosure and an uninsulated metal part electrically connected to a grounded circuit conductor.

16.21
An insulating barrier or liner that is used in addition to an air space in place of the required spacing through air shall be not less than 0.71 mm (0.028 in) thick.

If the barrier or liner is of fibre, the air space shall be not less than 0.8 mm (0.031 in). If the barrier or liner is of other material that is not suitable for the support of bare live parts, an acceptable air space shall be provided for the application.

A barrier or liner that is used in conjunction with an air space that is not less than 1/2 of the required spacing through air may be less than 0.71 mm (0.028 in) thick but not less than 0.33 mm (0.013 in) thick if the barrier or liner

(a) is of a material that is suitable for the mounting of bare live parts;
(b) has the necessary mechanical strength if exposed or otherwise likely to be subjected to mechanical abuse;
(c) is reliably held in place; and
(d) is located so that it will not be adversely affected by operation of the equipment in service.

Copyright © 2004 by the American Society of Mechanical Engineers.
No reproduction may be made of this material without written consent of ASME.

16.22
Insulating material having a thickness less than that specified in Clauses 16.20 and 16.21 may be used if, upon investigation, it is found to be suitable for the particular application.

16.23
Gaskets or seals, if used to obtain the required spacings, shall be subject to investigation to determine their effectiveness in service. They shall be mounted so that they are not liable to be readily damaged and shall be securely held in position.

16.24
For an enclosure not provided with conduit openings or knockouts, spacings of not less than the minimum specified in Clause 16.1 shall be provided between bare live parts and a conduit bushing installed at any location likely to be used during installation. Permanent marking on the enclosure, a template, or a full-scale drawing furnished with the device may be used to limit such locations.

16.25
When measuring a spacing between a bare live part and a bushing installed in the knockout, it shall be assumed that the bushing has the dimensions specified in Table 14 and there is a single locknut installed on the outside of the enclosure.

16.26
The spacings in a component device, such as a snap switch, lampholder, etc., supplied as part of control equipment, other than in a motor circuit or motor control circuit, shall be not less than the minimum spacings required for the component device or the spacings specified in Table 5, whichever are smaller.

16.27

16.27.1
As an alternative to the spacing requirements specified in Clauses 16.1 to 16.26 of this Standard, clearances and creepage distances shall be permitted to be evaluated in accordance with the requirements in CSA C22.2 No. 0.2 or ANSI//UL 840 that are described in Clause 16.27.4 of this Standard.

16.27.2
The clearance between an uninsulated live part and the wall of a metal enclosure, including fittings for conduit or armoured cable, shall be as specified in Table 5.

16.27.3
The clearance and creepage distance at field wiring terminals shall be in accordance with the requirements in Clauses 16.5 to 16.8 and Table 5.

16.27.4
In conducting evaluations in accordance with the requirements in CSA C22.2 No. 0.2 or ANSI//UL 840, the following guidelines shall be used:

(a) Unless specified elsewhere in this Standard, the pollution degree shall be considered to be pollution degree 3.
(b) Equipment that operates in the direct line of the source of power to the load equipment shall be considered to be Overvoltage Category II.
(c) Pollution degree 2 may be considered to exist on a printed wiring board between adjacent conductive material covered by any coating that provides an uninterrupted covering over at least one side and the complete distance up to the other side of conductive material.

Copyright © 2004 by the American Society of Mechanical Engineers.
No reproduction may be made of this material without written consent of ASME.

(d) Any printed board that complies with the requirements in UL 796 shall be considered to provide a minimum comparative tracking index (CTI) of 100. The materials listed in Clause 11.1 of this Standard or any material that complies with the requirements of Section 22 of UL 796 shall be considered to provide a minimum CTI of 175.
(e) In order to fulfill the requirements for coatings of printed wiring boards used to achieve pollution degree 1 in accordance with CSA C22.2 No. 0.2 or ANSI//UL 840, a coating shall comply with the requirements for Section 47 of UL 746C.
(f) Pollution degree 1 may also be achieved at a specific printed wiring board location by application of at least a 0.79 mm (0.031 in) thick layer of silicone rubber or by potting, without air bubbles, in epoxy or potting material.
(g) The evaluation of clearances to determine equivalence with through-air spacing requirements may be conducted in accordance with Clause 4.1 of CSA C22.2 No. 0.2 or ANSI//UL 840, Paragraph 4, regarding Clearance A (Equivalency).
(h) The evaluation of clearances and creepage distances shall be conducted in accordance with the requirements in Clauses 4.2 and 4.3 of CSA C22.2 No. 0.2 or Paragraph 5 and requirements on creepage distance in ANSI//UL 840.
(i) The phase-to-ground rated system voltage used in the determination of clearances shall be the equipment-rated supply voltage rounded to the next higher value (see Table 2 of CSA C22.2 No. 0.2 or Table 5.1 in ANSI//UL 840) for all points on the supply side of an isolating transformer or all points on the entire product if no isolating transformer is provided. The system voltage used in the evaluation of secondary circuitry may be interpolated with interpolation continued across the table for the rated impulse withstand voltage peak and clearance.
(j) Determination of the dimensions of clearance and creepage distances shall be conducted in accordance with the requirements of CSA C22.2 No. 0.2 or ANSI/UL 840.

17 Grounding

17.1
Control equipment shall comply with CSA C22.2 No. 0.4 or UL 508.

17.2
Provision for bonding and grounding of control equipment shall be provided by terminations in enclosures in accordance with Clause 17.3.

17.3
Grounding terminations shall be provided for at least the following number of grounding conductors:
(a) in power device enclosures, one grounding conductor for each incoming and each outgoing power circuit based on one circuit for three poles or less and one circuit for each additional three poles or less, plus one grounding conductor for the control circuit where applicable;
(b) in cast enclosures for power devices that have provision for only one conduit entry, one grounding conductor; and
(c) in auxiliary device enclosures, one grounding conductor.
Note: *Examples of auxiliary devices include limit switches, push-button switches, and relays.*

17.4
The maximum number of conductors on each termination shall be in accordance with Table 15.

17.5
For determining the suitability of the grounding termination, the grounding conductor size shall be
(a) No. 14 AWG copper or No. 12 AWG aluminum for control circuits and auxiliary devices; or
(b) selected from Table 16 for power circuits and devices.

Copyright © 2004 by the American Society of Mechanical Engineers.
No reproduction may be made of this material without written consent of ASME.

17.6
Means shall be provided to facilitate grounding of the secondaries of control circuit transformers.

18 Printed circuit boards

18.1
Printed circuit boards shall comply with applicable printed circuit board requirements and shall be classed V-0, V-1, and V-2.
Note: *See CAN/CSA-C22.2 No. 0.17 or ANSI/UL 94 for identification of the material classifications.*

18.2
Notwithstanding Clause 18.1, a printed circuit board located in low-voltage, isolated secondary, limited-energy circuits of a Class 2 transformer or in an isolated secondary circuit of a transformer having a maximum capacity of 100 VA need not be classed as minimum V-2 and may be classed HB.
Note: *See CAN/CSA-C22.2 No. 0.17 or ANSI/UL 94 for identification of the material classifications.*

18.3
If a printed circuit board is intended for connection only in low-energy circuits in which there is no risk of electric shock or injury to persons, the acceptability of the base material may be determined based on flammability tests only.

19 Tests

19.1 General
The temperature, overload, endurance, overvoltage, undervoltage, short-circuit, calibration, and dielectric strength tests of CSA C22.2 No. 14 or UL 508 shall be conducted as necessary, as well as the applicable tests of Clauses 19.2 to 19.9 of this Standard.

19.2 Endurance

19.2.1
Electromagnetic devices (e.g., armature, across-the-line, reduced voltage) that directly control an elevator's ac or dc drive motors shall perform acceptably when subjected to an endurance test that involves making and breaking 2 times the current corresponding to the horsepower rating of the device for 500 000 operations. For dc-rated devices, the load shall be a non-inductive resistive load. For ac-rated devices, the load shall have a power factor of 0.4 to 0.5. The cycle rate shall be 1 s on and 9 s off, except that the number of cycles per minute may be increased at the manufacturer's option. The endurance test shall be conducted following the overload test of Clause 19.1.

19.2.2
Notwithstanding Clause 19.2.1, a controller that has the device's coil circuit interlocked or sequenced such that in normal operation the device does not make or break current shall be tested as described in Clause 19.2.1, except the test current shall only be applied during the last 5 operations.

19.2.3
Notwithstanding Clauses 19.2.1 and 19.2.2, electromagnetic devices used in elevating devices for people with physical disabilities (platform lifts and stairway chairlifts) shall perform acceptably when subjected to the applicable endurance test of CSA C22.2 No. 14 or UL 508.

Copyright © 2004 by the American Society of Mechanical Engineers.
No reproduction may be made of this material without written consent of ASME.

19.2.4
All other devices shall perform acceptably when subjected to the applicable endurance test of Clause 19.1.

19.3 Solid-state ac motor controller tests

19.3.1 General
The performance of a solid-state motor controller shall be investigated by subjecting a representative sample or samples in commercial form to the tests indicated in Clause 19.3. Tests shall be conducted in the sequence specified in Table 17. Consideration shall be given to heat-sink capability, solid-state device ratings, and other criteria when determining which samples to use for testing a line of similarly constructed controllers.

19.3.2 Test voltage
Tests shall be conducted at rated frequency at a test voltage not less than 120, 208, 240, 277, 480, or 600 V, as appropriate for the voltage rating, except that the tests in Clauses 19.3.3 and 19.3.4 may be conducted at a voltage between 90 and 110% of the voltage specified if the current load is adjusted to produce the maximum normal heating and if the power semiconductors are capable of conduction as intended at the test voltage.

19.3.3 Temperature test

19.3.3.1
When operating in the normal mode resulting in maximum heating and as described in Clauses 19.1 and 19.3.3.2, solid-state motor controllers shall not
(a) attain a temperature high enough to constitute a risk of fire;
(b) adversely affect any materials or components employed in the device; or
(c) exceed, at stabilized temperature, the temperature rises specified in Table 18.

19.3.3.2
For the purpose of evaluating the temperature limit of the material, insulating material that is used at the junction in lieu of required spacings shall be considered to be at the junction temperature. To determine the insulating material temperature, reference temperatures (i.e., case, tab, heat-sink, or similar) shall be measured and the junction temperature shall be calculated based on the semiconductor manufacturer's power dissipation and thermal data.

19.3.4 Dielectric voltage withstand test
The dielectric voltage withstand test described in Clause 19.1 shall be conducted immediately after the temperature test with the sample at stabilized temperature and, where necessary, the power semiconductor (in the power circuit) shorted. If placement of thermocouples can adversely affect the results of the dielectric voltage withstand test, the test may be conducted on a sample without thermocouples that has been operated as specified for the temperature test until the temperature has stabilized.

19.3.5 Overvoltage and undervoltage tests
A control that employs an electromagnet shall comply with the overvoltage and undervoltage tests described in Clause 19.1.

19.3.6 Overload and endurance tests
A solid-state motor controller shall comply with the appropriate overload and endurance tests described in Clause 19.1.

Copyright © 2004 by the American Society of Mechanical Engineers.
No reproduction may be made of this material without written consent of ASME.

19.3.7 Exception
Notwithstanding Clause 19.3.6, the endurance test need not be conducted if the test current is the same as the rated current or if there is no inrush current.

19.3.8 Short-circuit test

19.3.8.1 Compliance
Solid-state motor controllers shall comply with the following after the test described in Clauses 19.3.8.3 to 19.3.8.6:
(a) The cotton indicator shall not have ignited.
(b) The fuse connected between the live pole and the enclosure or equipment dead metal shall not have opened.
(c) The door or cover shall not be blown open, and it shall be possible to open the door or cover. Deformation of the enclosure is acceptable but shall not result in the accessibility of live parts as determined by the use of the rods specified in Clauses 19.8 and 19.9.
(d) Wires shall not be pulled out of connectors, and the wire insulation shall not burn out.

19.3.8.2 Selection of samples
A sufficient number of samples considered representative of a product line shall be subjected to short circuit tests. Representative samples shall be selected on the basis of such features as configuration and ratings.

19.3.8.3 Test procedures

19.3.8.3.1
Open equipment shall be tested in an enclosure judged to be representative of that likely to be encountered when the equipment is in service. Tests may be conducted without an enclosure and considered equivalent to tests conducted using an enclosure if such testing is agreeable to those concerned. If tests are to be conducted without an enclosure, surgical cotton shall be placed on a wire cage that surrounds and is close to the equipment under test so as to closely simulate the intended enclosure.

19.3.8.3.2
The enclosure or grounded metal parts of open equipment shall be connected through a non-time-delay, 30 A cartridge fuse to the live pole judged least likely to arc to ground. The fuse shall have an interrupting rating at least equal to the short-circuit-withstand test current in the short-circuit test of Clause 19.1. The connection shall be made to the load side of the limiting impedance by a No. 10 AWG copper wire, 1.2 to 1.8 m (4 to 6 ft) long.

19.3.8.3.3
Notwithstanding Clause 19.3.8.3.2, the connection of the enclosure or grounded metal parts of open equipment may be made with No. 12 or 14 AWG copper wire if the branch-circuit conductors are No. 12 or 14 AWG, respectively.

19.3.8.4 Equipment in an outer enclosure
When testing on equipment inside an outer enclosure, surgical cotton shall be placed at all openings, handles, flanges, joints, or the like, on the outside of the enclosure.

19.3.8.5 Protective devices
A short-circuit protective device that has not been investigated and determined to be reliable shall be defeated during the test.

Copyright © 2004 by the American Society of Mechanical Engineers.
No reproduction may be made of this material without written consent of ASME.

19.3.8.6 Test circuit conditions
The test circuit conditions for the short-circuit shall be as described in Clause 19.1.

19.3.9 Breakdown of components test

19.3.9.1
A solid-state motor controller under test shall comply with the requirements in Clause 19.4.11.

19.3.9.2
With reference to Clause 19.3.9.1, each of the following conditions shall be unacceptable:
(a) asymmetrical switching other than half-wave;
(b) half-wave operation for a single-phase controller rated less than 5 hp; and
(c) the transmitting of one cycle or more of voltage source to the motor with the control in the OFF position, thus permitting possible rotation of a de-energized motor.

19.4 Power-conversion equipment

19.4.1 General

19.4.1.1
The performance of power-conversion equipment shall be investigated by subjecting a representative sample or samples in commercial form to the tests described in Clauses 19.4.1.2 to 19.4.11. The tests shall be as specified in Table 19 and shall be conducted in the sequence outlined in that table. Consideration shall be given to heat-sink design, solid-state device ratings, and other design criteria when selecting samples to use for testing a line of similarly constructed devices.

19.4.1.2
Tests shall be conducted at rated frequency and a test voltage not less than 120, 208, 240, 277, 480, or 600 V, as appropriate for the voltage rating, except that the tests in Clauses 19.4.2.1 to 19.4.2.3 may be conducted at a voltage between 90 and 110% of the voltage specified if the load current is adjusted to produce the maximum normal heating.

19.4.1.3
Power-conversion equipment intended to control a variable-speed motor load shall be tested controlling
(a) a load equivalent to that of a motor with voltage, frequency, and current ratings corresponding to the marked rating; or
(b) a test motor capable of being loaded to the values specified.

19.4.1.4
Notwithstanding Clause 19.4.1.3, the test motor may be simulated by a passive load consisting of resistive or inductive loads.

19.4.2 Temperature test

19.4.2.1
When operating in the normal mode resulting in maximum heating, power-conversion equipment shall not attain a temperature high enough to
(a) constitute a risk of fire;
(b) adversely affect any materials or components employed in the device; or
(c) exceed, at stabilized temperatures, the temperature rises specified in Table 18.

Copyright © 2004 by the American Society of Mechanical Engineers.
No reproduction may be made of this material without written consent of ASME.

19.4.2.2
For insulating materials at semiconductor junctions that are used in lieu of required spacings, see the requirements in Clause 19.3.4.

19.4.2.3
The size of a conductor that represents field wiring in the temperature test shall be based on the rms value of the current.

19.4.3 Dielectric voltage withstand test
The dielectric voltage withstand test described in Clause 19.1 shall be conducted immediately after the temperature test with the sample at stabilized temperature. If placement of thermocouples can adversely affect the results of the dielectric voltage withstand test, the test may be conducted on a sample without thermocouples that has been operated as specified in the temperature test until the temperature has stabilized.

19.4.4 Operation tests

19.4.4.1
During and upon completion of the operation tests in Clauses 19.4.5 to 19.4.10, the power-conversion equipment shall be electrically and mechanically operable, and there shall be no evidence of a risk of fire or electrical shock. The fuse specified in Clause 19.4.4.2 shall not open, and the surgical cotton specified in Clause 19.3.8.3.1 or 19.3.8.4, whichever is applicable, shall not glow or flame.

19.4.4.2
To assess the risk of electric shock, the outer enclosure (if any) and grounded or exposed dead metal parts shall be connected through a 30 A fuse to the supply circuit pole least likely to arc to ground. For grounded control circuits, the enclosure and grounded or exposed dead metal parts shall be connected through the 30 A fuse to ground. To assess the risk of fire, the procedures specified in Clauses 19.3.8.3.1 to 19.3.8.4 shall be followed.

19.4.4.3
Before all operation tests, the test sample shall be mounted, connected, and operated as described in the temperature test in Clauses 19.4.1 and 19.4.2.

19.4.5 Normal operation

19.4.5.1
Power-conversion equipment that has a rheostat, a potentiometer, or a similar device intended for operator control shall be subjected to 100 operations under the most severe normal conditions for which the control is intended.

19.4.5.2
The procedure described in Clause 19.4.5.1 is intended to demonstrate the ability of the device to control and sequence the circuit under normal conditions of operation. For motor loads, this includes starting and running with the motor loaded to full load at normal speed.

19.4.6 Contactor overload
A contactor that has the coil circuit interlocked or sequenced in such a way that in normal operation the contactor does not make or break load current shall be tested at the maximum current permitted by current-limiting control, if provided, but at least at 150% of full-load current. Five operations shall be conducted.

Copyright © 2004 by the American Society of Mechanical Engineers.
No reproduction may be made of this material without written consent of ASME.

19.4.7 Single phasing

Three-phase power-conversion equipment shall be operated with one line disconnected at the input. The disconnected line shall be the one determined to be the line to which any protective devices are the least responsible. The test shall be conducted by disconnecting one line with the power-conversion equipment operating at maximum normal load and shall be repeated by initially energizing the device with one lead disconnected.

19.4.8 Inoperative blower motor

Power-conversion equipment having forced ventilation shall be operated at rated load with inoperative blower motor(s) until the test is terminated by a protective device or until the temperature stabilizes.

19.4.9 Clogged filter

Enclosed power-conversion equipment having filtered ventilation openings shall be operated with the openings blocked to represent clogged filters. The test shall be conducted initially with the ventilation openings blocked approximately 50%. The test shall be repeated with the ventilation openings fully blocked until terminated by a protective device or until the temperature stabilizes.

19.4.10 Current-limiting control

Power-conversion equipment incorporating a current-limiting control shall be operated with the load increased to cause the power-conversion equipment to operate in the current-limiting mode. If the current-limiting control is adjustable, it shall be adjusted to the setting producing the most severe results. The duration of the test shall not exceed the maximum time required for operation of the overload protective device or system supplied or specified on the marking required by Clause 20.20.

19.4.11 Breakdown of components

19.4.11.1

There shall be no emission of flame or molten metal nor ignition of cotton loosely placed over all openings of ventilated equipment or totally surrounding open devices when passive devices such as capacitors and resistors or solid-state components such as transistors and diodes are short- or open-circuited.

19.4.11.2

Notwithstanding Clause 19.4.11.1, the test shall not be required

(a) if circuit analysis indicates that no other component or portion of the circuit will be damaged as a result of the assumed open-circuiting or short-circuiting of a component;
(b) on power semiconductor devices if equivalent testing is accomplished during short-circuit tests; or
(c) for components complying with requirements applicable to the component.

19.5 Impact test

19.5.1

Each of 3 samples of the equipment shall be subjected to an impact test on any surface that can be exposed to a blow during normal use or during installation. For an enclosure having no surface area exceeding 25 800 mm^2 (40 in^2), the impact shall be 6.78 J (5.0 ft-lbf), produced by dropping a steel sphere 51 mm (2.0 in) in diameter and weighing 0.53 kg (1.17 lb) from a height of 1300 mm (51 in). For an enclosure having any surface area greater than 25 800 mm^2 (40 in^2), the impact shall be 13.56 J (10.0 ft-lbf), produced by dropping a steel sphere 51 mm (2.0 in) in diameter and weighing 0.53 kg (1.17 lb) from a height of 2600 mm (102 in). The impact shall not result in any of the conditions specified in Clause 6.5. Tests shall be conducted at any ambient temperature within the range of 10 to 40 °C (50 to 104°F).

Copyright © 2004 by the American Society of Mechanical Engineers.
No reproduction may be made of this material without written consent of ASME.

19.5.2
Each of 3 samples of the equipment shall be cooled to 0 °C (32°F) and maintained at that temperature for 3 h. Immediately following removal from the cold chamber, the sample shall be subjected to the impact test described in Clause 19.5.1.

19.6 Printed circuit board coatings

19.6.1 General
For printed circuit boards that are coated in accordance with Table 12, and in which transients are limited and spacings are reduced, the suitability of the coating shall be determined by subjecting 3 samples to the tests specified in Clauses 19.6.2 to 19.6.5.

19.6.2 Dielectric strength (new samples)
The samples shall be conditioned by flexing them slightly 4 times to simulate conditions that can normally be expected.

A voltage of 1000 V plus twice the rated voltage shall be applied for 1 min without breakdown between adjacent printed circuits where there are reduced spacings.

19.6.3 Dielectric strength (aged samples)
The same samples shall then be conditioned again by maintaining them at 90 ± 1 °C (194 ± 2°F) for 96 h and then flexing them as described in Clause 19.6.2.

They shall then be subjected to the dielectric strength test described in Clause 19.6.2.

19.6.4 Dielectric strength (after humidity conditioning)
The same samples shall then be conditioned again by maintaining them at 23 ± 1 °C (73 ± 2°F) and 96 ± 2% relative humidity for 96 h and then flexing them as described in Clause 19.6.2.

They shall then be subjected to the dielectric strength test described in Clause 19.6.2.

19.6.5 Adhesion
Following the tests described in Clauses 19.6.2 to 19.6.4, the samples shall be investigated for adhesion of the coating to the board by scraping or cutting. The coating shall not flake.

19.7 Transient-voltage-surge suppression

19.7.1
A surge-controlled circuit as specified in Clauses 16.2 and 16.3 shall withstand without breakdown a single 1.2 × 50 μs full-wave impulse with a crest value of 5.0 kV (see ANSI/IEEE 4). The transient voltage surge shall not exceed 300% of the peak working voltage or 300 V, whichever is greater, and the equipment shall be operational upon completion of the test.

19.7.2
The equipment shall be connected to a single-phase source of supply, operating at rated voltage, with the output of the impulse generator connected across the equipment.

19.8 Compression

19.8.1
As required by Clause 4.3.2, an enclosure constructed of metal that is thinner than that specified in Tables 1 and 2 shall be reinforced so that its deflection is not more than that of a reference sheet-metal enclosure of the maximum length and width constructed of the minimum required sheet-metal thickness.

Copyright © 2004 by the American Society of Mechanical Engineers.
No reproduction may be made of this material without written consent of ASME.

19.8.2
The enclosure shall rest on a flat, unyielding horizontal surface. A vertical force shall be applied at any point on the surface of the enclosure except for the door or cover, using a flat face of a steel bar having a 13 mm (0.5 in) square cross-section. Force shall be applied to the end, the side, and the rear walls of each enclosure. The value of the force and the limit of deflection, both of which shall be measured and recorded, are not specified, but the force on each wall of both the test and reference enclosures shall be sufficient to result in a measurable deflection of the test enclosure.

19.9 Deflection

19.9.1
As required by Clause 4.3.2, a drawn, embossed, flanged, or similarly strengthened door, front, or cover made of metal having a thickness less than that specified in Tables 1 and 2 shall not deflect inward more than 6.4 mm (0.25 in) when a vertical force of 445 N (100 lbf) is applied at any point on the door, front, or cover.

19.9.2
The force shall be applied through a flat face of a steel bar having a 13 mm (0.5 in) square cross-section. The test shall be conducted with the door, front, or cover mounted on the box in the intended manner, and the enclosure placed with its back on a flat, unyielding horizontal surface.

19.10 Cord pullout
As required by Clause 15.8.2, a direct pull of 156 N (35 lbf) shall be applied to the cord for 60 s. Supply connections within the equipment, if provided, shall be disconnected from terminals or splices during the test.

20 Marking

20.1
Electrical equipment shall be legibly marked in accordance with Item (a) and, where applicable, with Items (b) and (c) as well:

(a) The marking for a certified assembly shall be in the form of a nameplate permanently attached to the assembly. The marking for a certified component shall be permitted to be in the form of a permanently attached nameplate or shall be made by permanent silk-screening or hot stamping, or by other permanent and legible means. The marking shall specify the following:
  (i) indication of certification, which shall include "CSA B44.1/ASME A17.5";
  (ii) the manufacturer's name, trademark, or a file number by which the organization responsible for the product may be identified;
  (iii) the complete electrical rating as described in Clause 20.3;
  (iv) the catalogue number, type, or equivalent for identification of the product; and
  (v) temperature rating [60 °C (140°F) only; 60 to 75 °C (140 to 167°F) or 75 °C (167°F) only] of the field-installed conductors for which the unit has been investigated, except that devices rated 30 A or less, or horsepower-rated devices having equivalent current rating of 24 A or less (see Tables 11 and 20), which have been tested when wired with 60 °C (140°F) or 60/75 °C (140/167°F) conductors, need not be marked.

(b) Permanent or temporary (removable, "throw-away" labels or strip-off adhesive) nameplates shall be used to specify
  (i) instructions as to the method of installation to be followed or precautions to be observed when installing; and
  (ii) details of parts supplied loose to be fitted together during installation.

Copyright © 2004 by the American Society of Mechanical Engineers.
No reproduction may be made of this material without written consent of ASME.

(c) Separate drawings or manuals specifying installation information, setting and adjustments, wiring diagrams, etc., shall be provided where this data cannot be included in the assembly due to lack of space. This information may be provided separately or be installed in a permanent-type pocket located inside one or all of the compartments. If all of the information is located in one compartment, the door concerned shall be marked to indicate the location of the pocket.

Notes:

(1) *Individual components are not required to be marked if the entire assembly is marked.*

(2) *Wiring temperature ratings are only in SI (metric) units as this is the industry standard.*

20.2

Electrical equipment for use with either copper or aluminum conductors shall be marked Cu-Al or the equivalent.

20.3

Unless otherwise indicated, electrical equipment shall be rated in volts, full-load amperes, volt-amperes, or any combination thereof. The rating shall indicate whether the equipment is for direct or alternating current. The rating of ac equipment shall include the number of phases and, if necessary, the frequency, except that the rating of equipment obviously intended for single-phase use only need not include the phase rating.

20.4

The rating of an auxiliary device shall

(a) be in the form of a contact rating code designation in accordance with Tables 20 and 21;

(b) be in volts, amperes, and inrush amperes; or

(c) indicate the voltage and contain the words "standard duty" or "heavy duty", or the abbreviation "SD" or "HD", as applicable.

20.5

Marking on polymeric enclosures shall consist of the following or equivalent wording:

CAUTION: BONDING BETWEEN CONDUITS MUST BE PROVIDED.*

**The equivalent French wording is "ATTENTION. ASSURER LA CONTINUITÉ ÉLECTRIQUE ENTRE LES CONDUITS.".*

20.6

Manual switching means shall be clearly marked with the words "ON" and "OFF"* or with symbols† to indicate the ON and OFF positions of switches or controls that have such positions unless the construction or application of the switch or control is such that marking is unnecessary.

**The equivalent French wording is "MARCHE" and "ARRÊT".*

†*Symbols for ON and OFF are "I" and "O", respectively.*

20.7

Electrical equipment that is energized by more than one source and that does not have means for disconnecting all ungrounded conductors within a single enclosure or compartment shall be permanently marked on the outside with the following or equivalent wording:

WARNING: MORE THAN ONE LIVE CIRCUIT. SEE DIAGRAM.*

**The equivalent French wording is "AVERTISSEMENT. CET ÉQUIPEMENT RENFERME PLUSIEURS CIRCUITS SOUS TENSION. VOIR LE SCHÉMA.".*

Note: *Clause 20.7 does not apply to circuits of extra-low voltage (i.e., circuits rated* 30 V *or less).*

20.8

The type and rating of any fuses used to provide overcurrent protection in control circuits shall be permanently marked adjacent to the fuseholder.

Copyright © 2004 by the American Society of Mechanical Engineers.
No reproduction may be made of this material without written consent of ASME.

20.9

Electrical equipment provided with screw-type terminals for field wiring connections shall be identified using the designation that is given in the wiring diagram. In addition, contactors, relays, switches, overloads, and power resistors shall be identified using the designations that are given in the wiring diagram.

20.10

An oil tank shall be marked to indicate the proper oil level.

20.11

When required, electrical equipment shall be marked with the following or equivalent wording:

WARNING: WHEN MOUNTING ON OR OVER A COMBUSTIBLE SURFACE, A FLOOR PLATE OF AT LEAST 1.43 mm (0.056 in) GALVANIZED OR 1.6 mm (1/16 in) UNCOATED STEEL EXTENDING AT LEAST 150 mm (6 in) BEYOND THE EQUIPMENT ON ALL SIDES MUST BE INSTALLED.*

**The equivalent French wording is "AVERTISSEMENT. LORSQUE L'APPAREIL EST INSTALLÉ SUR OU PAR-DESSUS UNE SURFACE COMBUSTIBLE, ON DOIT PLACER UNE PLAQUE D'ACIER GALVANISÉ D'AU MOINS 1,43 mm (0,056 po) OU UNE PLAQUE D'ACIER SANS REVÊTEMENT DE 1,6 mm (1/16 po) DÉPASSANT D'AU MOINS 150 mm (6 po) TOUT AUTOUR DE L'APPAREIL.".*

This marking need not be permanent.

20.12

A control device that is shipped in a "knocked-down" condition for assembly in the field shall have the separate pieces identified to ensure proper assembly.

20.13

A live heat sink or other part likely to be mistakenly identified as dead metal and exposed to persons shall be marked with the word CAUTION and the following or equivalent:

RISK OF ELECTRIC SHOCK — PLATES [or other wording describing the type of part] ARE LIVE — DISCONNECT POWER SUPPLY BEFORE SERVICING.*

**The equivalent French wording is "RISQUE DE CHOC ÉLECTRIQUE — AILETTES [ou autre formule décrivant le type de pièce] SOUS TENSION — COUPER L'ALIMENTATION AVANT L'ENTRETIEN.".*

The marking shall be located on the live part so as to make the risk known before the part is likely to be touched.

20.14

Elevator control equipment incorporating an overload relay shall be marked with the following:

SUITABLE FOR USE ON A CIRCUIT CAPABLE OF DELIVERING NOT MORE THAN _____ rms SYMMETRICAL AMPERES, _____ VOLTS MAXIMUM.*

**The equivalent French wording is "CONVIENT À UN CIRCUIT DONT LE COURANT DE DÉFAUT MAXIMAL EST DE ___ AMPÈRES EFFICACES SYMÉTRIQUES SOUS UNE TENSION MAXIMALE DE ___ V.".*

The ampere rating shall not be more than the value for which the device was tested.

20.15

An overload relay that has a replaceable current element, or control equipment incorporating such an overload relay, shall be permanently marked with the following or equivalent wording:

WARNING: THE OVERLOAD RELAY MUST BE REPLACED IF BURNOUT OF THE CURRENT ELEMENT OCCURS.*

Copyright © 2004 by the American Society of Mechanical Engineers.
No reproduction may be made of this material without written consent of ASME.

**The equivalent French wording is "AVERTISSEMENT. LE RELAIS DE SURCHARGE DOIT ÊTRE REMPLACÉ SI L'ÉLÉMENT SENSIBLE AU COURANT EST GRILLÉ.".*

20.16

Where more than one grounding conductor No. 6 AWG or smaller is to be terminated in a single- or multi-conductor terminal that will accept a range of conductor sizes, the following marking shall appear adjacent to the grounding terminal:

TWIST WIRES TOGETHER BEFORE INSERTING IN TERMINAL.*

**The equivalent French wording is "ENROULEZ LES FILS ENSEMBLE AVANT DE LES INTRODUIRE DANS LA BORNE.".*

If the terminal is suitable for both copper and aluminum conductors, the following additional marking or its equivalent shall also appear adjacent to the grounding terminal:

CU-AL, COPPER WIRES MUST NOT BE MIXED WITH ALUMINUM WIRES IN THE SAME TERMINAL HOLE.†

†The equivalent French wording is "CU-AL, NE PAS COMBINER DE FILS EN CUIVRE ET EN ALUMINIUM DANS LE MÊME TROU DE BORNE.".

20.17

A cautionary marking shall be prefixed with the word "CAUTION"* or "WARNING"†, as applicable, in letters not less than 3.2 mm (0.125 in) high. The remaining letters of such marking, unless specified otherwise in individual marking requirements, shall not be less than 1.6 mm (0.063 in) high.

**The equivalent French wording is "ATTENTION".*

†The equivalent French wording is "AVERTISSEMENT".

20.18

A control with dc motor ratings that does not comply with the requirements of Clause 15.1(d)(i) shall be marked with the following or equivalent wording:

WARNING: DO NOT CONNECT TO A CIRCUIT SUPPLIED BY A SINGLE-PHASE, HALF-WAVE RECTIFIER.*

**The equivalent French wording is "AVERTISSEMENT. NE PAS BRANCHER À UN CIRCUIT ALIMENTÉ PAR UN REDRESSEUR MONOPHASÉ SIMPLE ALTERNANCE.".*

A control that does not comply with the requirements of Clause 15.1(d)(ii) shall be marked with the following or equivalent wording:

WARNING: DO NOT CONNECT TO A CIRCUIT SUPPLIED BY A SINGLE-PHASE RECTIFIER OF THE HALF-WAVE OR FULL-WAVE TYPE.†

†The equivalent French wording is "AVERTISSEMENT. NE PAS BRANCHER À UN CIRCUIT ALIMENTÉ PAR UN REDRESSEUR MONOPHASÉ SIMPLE OU DOUBLE ALTERNANCE.".

20.19

With reference to the requirements in Clause 13.1, unless control circuit overcurrent protection is provided in the equipment, a permanent marking shall be provided on the controller or controller wiring diagram to indicate that such protection is sometimes necessary.

20.20

20.20.1

In addition to the applicable markings of Clauses 20.1 to 20.19, power-conversion equipment shall be marked as described in Clauses 20.20.2 to 20.20.7.

Copyright © 2004 by the American Society of Mechanical Engineers.
No reproduction may be made of this material without written consent of ASME.

20.20.2

Electrical equipment incorporating internal overload protection for the motor load and not requiring external or remote overload protection shall be marked to indicate the degree of protection provided. The marking shall indicate the protection level as a percentage of the full-load current. If the protection level is adjustable, the marking shall be provided with instructions for adjustment. Equipment not incorporating internal overload protection for the motor load and intended for use with external or remote overload protection shall be marked to indicate that such protection is required.

20.20.3

Electrical equipment intended to be used with motors that have thermal protectors in or on the motors shall be marked to

(a) indicate that the motors are required to have integral thermal protection; and
(b) identify the proper connection and the rating of the load imposed by the equipment on the protector contacts.

The rating shall be in volts and amperes, except it shall be in volts or volt-amperes if the load is electromagnetic. The marking shall also indicate alternating or direct current.

20.20.4

Electrical equipment shall be marked to indicate the specific size, catalogue number, and manufacturer for replacement fuses. The equipment marking shall indicate at least one acceptable type fuse.

20.20.5

Electrical equipment that is required to be connected to a supply source with a specific overcurrent protective device as specified in Clause 19.4.10 shall be marked to indicate the necessary protective device.

20.20.6

Markings in accordance with Clauses 20.20.2 to 20.20.5 may be provided on wiring diagrams or in instruction manuals that are supplied with the equipment and referenced on the nameplate or a similar marking that is permanently attached and visible after installation.

20.20.7

Power-conversion equipment that does not incorporate overspeed protection shall be so marked.

20.21

Controllers for elevating devices for people with physical disabilities (platform lifts and stairway chairlifts) shall be marked with the following or equivalent wording:

CONTROLLER FOR ELEVATING DEVICES FOR PEOPLE WITH PHYSICAL DISABILITIES*
**The equivalent French wording is "CONTRÔLEUR D'APPAREIL ÉLÉVATEUR POUR PERSONNE HANDICAPÉE".*

or

CONTROLLER FOR PLATFORM LIFTS AND STAIRWAY CHAIRLIFTS†
†*The equivalent French wording is "CONTRÔLEUR POUR ÉLÉVATEUR POUR FAUTEUILS ROULANTS ET MONTE-ESCALIER".*

Copyright © 2004 by the American Society of Mechanical Engineers.
No reproduction may be made of this material without written consent of ASME.

Table 1
Thickness of sheet metal for enclosures — Carbon steel or stainless steel

(See Clauses 4.3.1–4.3.3, 19.8.1, and 19.9.1.)

Without supporting frame*				With supporting frame or equivalent reinforcement*				Minimum acceptable thickness, mm (in)	
Maximum width†		Maximum length‡		Maximum width†		Maximum length‡			
mm	(in)	mm	(in)	mm	(in)	mm	(in)	Uncoated	Metal-coated
102	(4.0)	Not limited		159	(6.25)	Not limited		0.52 (0.020)	0.59 (0.023)
121	(4.75)	146	(5.75)	172	(6.75)	210	(8.25)		
152	(6.0)	Not limited		241	(9.5)	Not limited		0.68 (0.026)	0.75 (0.029)
178	(7.0)	222	(8.75)	254	(10.0)	318	(12.5)		
203	(8.0)	Not limited		305	(12.0)	Not limited		0.81 (0.032)	0.88 (0.034)
228	(9.0)	292	(11.5)	330	(13.0)	406	(16.0)		
318	(12.5)	Not limited		495	(19.5)	Not limited		1.07 (0.042)	1.16 (0.045)
356	(14.0)	457	(18.0)	533	(21.0)	635	(25.0)		
457	(18.0)	Not limited		686	(27.0)	Not limited		1.35 (0.053)	1.43 (0.056)
508	(20.0)	635	(25.0)	737	(29.0)	914	(36.0)		
559	(22.0)	Not limited		838	(33.0)	Not limited		1.52 (0.060)	1.62 (0.063)
635	(25.0)	787	(31.0)	889	(35.0)	1092	(43.0)		
635	(25.0)	Not limited		991	(39.0)	Not limited		1.70 (0.067)	1.79 (0.070)
737	(29.0)	965	(38.0)	1041	(41.0)	1295	(51.0)		
838	(33.0)	Not limited		1295	(51.0)	Not limited		2.03 (0.080)	2.14 (0.084)
965	(38.0)	1194	(47.0)	1372	(54.0)	1676	(66.0)		
1067	(42.0)	Not limited		1626	(64.0)	Not limited		2.36 (0.093)	2.47 (0.097)
1194	(47.0)	1499	(59.0)	1727	(68.0)	2134	(84.0)		
1321	(52.0)	Not limited		2032	(80.0)	Not limited		2.74 (0.108)	2.85 (0.112)
1524	(60.0)	1680	(66.0)	2134	(84.0)	2616	(103.0)		
1600	(63.0)	Not limited		2464	(97.0)	Not limited		3.12 (0.123)	3.23 (0.127)
1854	(73.0)	2286	(90.0)	2616	(103.0)	3226	(127.0)		

**See Clause 4.3.3.*

†The width is the smaller dimension of a rectangular piece of sheet metal that is part of an enclosure. Adjacent surfaces of an enclosure may have supports in common and be made of a single sheet.

‡"Not limited" applies only if the edge of the surface is flanged at least 12.7 mm *(0.5 in) or fastened to adjacent surfaces not normally removed in use.*

Copyright © 2004 by the American Society of Mechanical Engineers.
No reproduction may be made of this material without written consent of ASME.

Table 2
Thickness of sheet metal for enclosures — Aluminum, copper, or brass

(See Clauses 4.3.1–4.3.3, 19.8.1, and 19.9.1.)

Without supporting frame*				With supporting frame or equivalent reinforcement*				Minimum acceptable thickness	
Maximum width†		Maximum length‡		Maximum width†		Maximum length‡			
mm	(in)	mm	(in)	mm	(in)	mm	(in)	mm	(in)
76	(3.0)	Not limited		178	(7.0)	Not limited			
89	(3.5)	102	(4.0)	216	(8.5)	241	(9.5)	0.58	(0.023)
102	(4.0)	Not limited		254	(10.0)	Not limited			
127	(5.0)	152	(6.0)	267	(10.5)	343	(13.5)	0.74	(0.029)
152	(6.0)	Not limited		356	(14.0)	Not limited			
165	(6.5)	203	(8.0)	381	(15.0)	457	(18.0)	0.91	(0.036)
203	(8.0)	Not limited		483	(19.0)	Not limited			
241	(9.5)	292	(11.5)	533	(21.0)	635	(25.0)	1.14	(0.045)
305	(12.0)	Not limited		711	(28.0)	Not limited			
356	(14.0)	406	(16.0)	762	(30.0)	940	(37.0)	1.47	(0.058)
457	(18.0)	Not limited		1067	(42.0)	Not limited			
508	(20.0)	635	(25.0)	1143	(45.0)	1397	(55.0)	1.91	(0.075)
635	(25.0)	Not limited		1524	(60.0)	Not limited			
737	(29.0)	914	(36.0)	1626	(64.0)	1981	(78.0)	2.41	(0.095)
940	(37.0)	Not limited		2210	(87.0)	Not limited			
1067	(42.0)	1346	(53.0)	2362	(93.0)	2896	(114.0)	3.10	(0.122)
1321	(52.0)	Not limited		3124	(123.0)	Not limited			
1524	(60.0)	1880	(74.0)	3302	(130.0)	4064	(160.0)	3.89	(0.153)

**See Clause 4.3.3.*

†The width is the smaller dimension of a rectangular piece of sheet metal that is part of an enclosure. Adjacent surfaces of an enclosure may have supports in common and be made of a single sheet.

‡"Not limited" applies only if the edge of the surface is flanged at least 12.7 mm *(0.5 in) or fastened to adjacent surfaces not normally removed in use.*

Copyright © 2004 by the American Society of Mechanical Engineers.
No reproduction may be made of this material without written consent of ASME.

Table 3
Size of bonding conductor
(See Clause 6.9.)

Rating of circuit not exceeding, A	Size of bonding conductor		Size of metallic conduit or pipe, in	Size of electrical metallic tubing, in
	Copper wire, AWG	Aluminum wire, AWG		
15	14	12	1/2	1/2
20	12	10	1/2	1/2
30	10	8	1/2	1/2
40	10	8	1/2	1
60	10	8	3/4	1
100	8	6	1	1-1/4
200	6	4	1-1/4	1-1/2
300	4	2	1-1/4	1-1/2
400	3	1	2-1/2	2-1/2
500	2	0	2-1/2	2-1/2
600	1	00	3	4
800	0	000	4	4
1000	00	0000	4	4
1200	000	250 kcmil	6	—
1600	0000	350 kcmil	—	—
2000	250 kcmil	400 kcmil	—	—
2500	350 kcmil	500 kcmil	—	—
3000	400 kcmil	600 kcmil	—	—
4000	500 kcmil	800 kcmil	—	—
5000	700 kcmil	1000 kcmil	—	—
6000	800 kcmil	1250 kcmil	—	—

Table 4
Minimum acceptable distance from an opening to a part that can involve a risk of electric shock or injury to persons
(See Clause 7.1.)

Minor dimension of opening, mm (in)*	Minimum distance from opening to part, mm (in)
25.4 (1.00)	165.0 (6.5)
31.8 (1.25)	190.0 (7.5)
38.1 (1.50)	318.0 (12.5)
47.6 (1.87)	394.0 (15.5)
54.0 (2.12)	444.0 (17.5)
†	—

**See Clause 7.4.*
†*More than* 54 mm *(2.12 in) but not more than* 152.0 mm *(6 in).*

Copyright © 2004 by the American Society of Mechanical Engineers.
No reproduction may be made of this material without written consent of ASME.

Table 5
Minimum spacings for live parts

(See Clauses 7.7, 7.9, 16.1, 16.2, 16.6–16.8, 16.10, 16.11, 16.13, 16.16, 16.26, 16.27.2, and 16.27.3.)

Group		Nominal voltage involved, V	Minimum spacings, mm (in)			
			Between bare live parts of opposite polarity and between bare live parts and grounded metal parts other than the enclosure		Between bare live parts and the walls of metal enclosures, including fittings for conduit or armoured cable*	
			Clearance	Creepage	Clearance	Creepage
A	Control apparatus*	51–150	3.0 (0.12)†	6.3 (0.25)	12.7 (0.50)	12.7 (0.50)
		151–300	6.3 (0.25)	9.4 (0.37)	12.7 (0.50)	12.7 (0.50)
		301– 600	9.4 (0.37)	12.7 (0.50)	12.7 (0.50)	12.7 (0.50)
		601–1000	14.0 (0.55)	21.6 (0.85)	20.3 (0.80)	25.4 (1.00)
		1001–1500	17.8 (0.70)	30.5 (1.20)	30.5 (1.20)	41.9 (1.65)
B	Devices having limited ratings‡	51–150	1.5 (0.06)†	1.5 (0.06)†	6.3 (0.25)	6.3 (0.25)
		151–300	1.5 (0.06)†	3.0 (0.12)†	6.3 (0.25)	6.3 (0.25)
		301–600	4.6 (0.18)†	9.4 (0.37)	12.7 (0.50)	12.7 (0.50)
C	Other small devices‡	51–150	3.0 (0.12)†	6.3 (0.25)	6.3 (0.25)	6.3 (0.25)
		151–300	6.3 (0.25)	6.3 (0.25)	6.3 (0.25)	6.3 (0.25)

**For the purpose of this requirement, a metal piece attached to the enclosure is considered to be a part of the enclosure if deformation of the enclosure is likely to reduce spacings between the metal piece and uninsulated live parts.*

†The spacing between wiring terminals of opposite polarity and the spacing between a wiring terminal and a grounded non-current-carrying metal part shall be not less than 6.3 mm *(0.25 in) if short-circuiting or grounding of such terminals can result from projecting strands of wire.*

‡Spacings for components or equipment rated at voltages below 51 V *are not specified but they shall be the subject of investigation.*

Notes:

(1) *When measuring oversurface spacing, any slot, groove, or similar feature that is* 0.33 mm *(0.013 in) wide or less in the contour of insulating material shall be disregarded.*

(2) *When measuring spacings, an air space of* 0.33 mm *(0.013 in) or less between a live part and an insulating surface shall be disregarded.*

Copyright © 2004 by the American Society of Mechanical Engineers.
No reproduction may be made of this material without written consent of ASME.

Table 6
Wire-bending space at the terminal of enclosed motor controllers
(See Clause 8.1.)

Size of wire*, AWG or kcmil (mm^2)		Minimum bending space, terminal to wall, mm (in)		
		Wires per terminal		
		1	2	3
14–10	(2.1–0.3)	—	—	—
8–6	(8.4–13.3)	38 (1-1/2)	—	—
4–3	(21.2–26.7)	51 (2)	—	—
2	(33.6)	64 (2-1/2)	—	—
1	(42.4)	76 (3)	—	—
1/0	(53.5)	127 (5)	127 (5)	178 (7)
2/0	(67.4)	152 (6)	152 (6)	191 (7-1/2)
3/0	(85.0)	178 (7)	178 (7)	203 (8)
4/0	(107.2)	178 (7)	178 (7)	216 (8-1/2)
250	(127)	203 (8)	203 (8)	229 (9)
300	(152)	254 (10)	254 (10)	279 (11)
350	(177)	305 (12)	305 (12)	330 (13)
400	(203)	305 (12)	305 (12)	356 (14)
500	(253)	305 (12)	305 (12)	381 (15)
600	(304)	356 (14)	406 (16)	457 (18)
700	(355)	356 (14)	406 (16)	508 (20)
750–800	(380–405)	457 (18)	483 (19)	559 (22)
900	(456)	457 (18)	483 (19)	610 (24)

**The wire size shall be based on Clause 15.1(b).*

Table 7
Maximum acceptable rating of overcurrent device
(See Clauses 13.2.1, 13.2.3, and 13.2.5.)

Rated primary current, A	Maximum rating of overcurrent protective device expressed as a percentage of the transformer primary current rating
Less than 2	300
2 to less than 9	167
9 or more	125*

**The next highest standard rating may be used if 125% of the current does not correspond to a standard rating of fuse or non-adjustable circuit breaker.*

Copyright © 2004 by the American Society of Mechanical Engineers.
No reproduction may be made of this material without written consent of ASME.

Table 8
Allowable ampacities of insulated copper conductors inside industrial control equipment enclosures (based on a room ambient temperature of 40 °C (104°F))

(See Clause 14.1.)

Conductor size, AWG	Conductors with 90 °C (194°F) insulation		Conductors with 105 °C (221°F) insulation	
	In conduit or non-ventilated raceway	Open or in ventilated raceway	In conduit or non-ventilated raceway	Open or in ventilated raceway
18	4	6	4	6
16	6	9	6	9
14	9	13	10	15
12	12	17	15	22
10	18	27	22	35
8	31	47	35	55
6	45	67	52	80
4	61	91	71	108
3	70	104	80	121
2	80	120	90	140
1	94	141	107	164
0	110	164	133	190
00	128	191	148	221
000	148	221	171	257
0000	173	258	200	300

Table 9
Ampacity correction factors for multiple conductor groupings

(See Clause 14.1.)

Number of conductors	Correction factor
1 to 3	1.00
4 to 6	0.80
7 to 24	0.70
25 to 42	0.60
43 and more	0.50

Copyright © 2004 by the American Society of Mechanical Engineers.
No reproduction may be made of this material without written consent of ASME.

Table 10
Full-load motor-running currents in amperes corresponding to various ac horsepower ratings

(See Clauses 15.1 and 15.2.)

Horse-power	110–120 V			220–240 V			440–480 V			550–600 V		
	Single-phase	2-phase	3-phase	Single-phase	2-phase	3-phase	Single-phase	2-phase	3-phase	Single-phase	2-phase	3-phase
1/10	3.0	—	—	1.5	—	—	—	—	—	—	—	—
1/8	3.8	—	—	1.9	—	—	—	—	—	—	—	—
1/6	4.4	—	—	2.2	—	—	—	—	—	—	—	—
1/4	5.8	—	—	2.9	—	—	—	—	—	—	—	—
1/3	7.2	—	—	3.6	—	—	—	—	—	—	—	—
1/2	9.8	4.0	4.0	4.9	2.0	2.0	2.5	1.0	1.0	2.0	0.8	0.8
3/4	13.8	4.8	5.6	6.9	2.4	2.8	3.5	1.2	1.4	2.8	1.0	1.1
1	16.0	6.4	7.2	8.0	3.2	3.6	4.0	1.6	1.8	3.2	1.3	1.4
1-1/2	19.0	9.0	10.4	10.0	4.5	5.2	5.0	2.3	2.6	4.0	1.8	2.1
2	24.0	11.8	13.6	12.0	5.9	6.8	6.0	3.0	3.4	4.8	2.4	2.7
3	34.0	16.6	19.2	17.0	8.3	9.6	8.5	4.2	4.8	6.8	3.3	3.9
5	56.0	26.4	30.4	28.0	13.2	15.2	14.0	6.6	7.6	11.2	5.3	6.1
7-1/2	80.0	38.0	44.0	40.0	19.0	22.0	21.0	9.0	11.0	16.0	8.0	9.0
10	100.0	48.0	56.0	50.0	24.0	28.0	26.0	12.0	14.0	19.0	10.0	11.0
15	135.0	72.0	84.0	68.0	36.0	42.0	34.0	18.0	21.0	27.0	14.0	17.0
19	—	94.0	108.0	88.0	47.0	54.0	44.0	23.0	27.0	35.0	19.0	22.0
25	—	118.0	136.0	110.0	59.0	68.0	55.0	29.0	34.0	44.0	24.0	27.0
30	—	138.0	160.0	136.0	69.0	80.0	68.0	35.0	40.0	54.0	28.0	32.0
40	—	180.0	198.0	176.0	90.0	104.0	88.0	45.0	52.0	70.0	36.0	41.0
50	—	226.0	260.0	216.0	113.0	130.0	108.0	56.0	65.0	86.0	45.0	52.0
60	—	—	—	—	133.0	154.0	—	67.0	77.0	—	53.0	62.0
75	—	—	—	—	166.0	192.0	—	83.0	96.0	—	66.0	77.0
100	—	—	—	—	218.0	248.0	—	109.0	124.0	—	87.0	99.0
125	—	—	—	—	—	312.0	—	135.0	156.0	—	108.0	125.0
150	—	—	—	—	—	360.0	—	156.0	180.0	—	125.0	144.0
190	—	—	—	—	—	480.0	—	198.0	240.0	—	167.0	192.0
250	—	—	—	—	—	602.0	—	—	302.0	—	—	242.0
300	—	—	—	—	—	—	—	—	361.0	—	—	289.0
350	—	—	—	—	—	—	—	—	414.0	—	—	336.0
400	—	—	—	—	—	—	—	—	477.0	—	—	382.0
500	—	—	—	—	—	—	—	—	590.0	—	—	472.0

Notes:

(1) *To obtain full-load currents for* 190 *and* 198 V *motors, increase corresponding* 220–240 V *ratings by 15% and 10%, respectively.*

(2) *To obtain full-load currents for* 265 *and* 277 V *motors, decrease corresponding* 220–240 V *ratings by 13% and 17%, respectively.*

(3) *These values of motor full-load current are for guidance only. Where exact values are required (e.g., for motor protection), always use those appearing on the motor nameplate.*

(4) *These values of motor full-load current are for motors running at speeds usual for belted motors and motors with normal torque characteristics. Motors built for especially low speed or high torques may require more current, and multi-speed motors will have full-load current varying with speed, in which case the nameplate current rating shall be used.*

(5) *For 90% and 80% power factor, multiply the above figures by 1.1 and 1.25, respectively.*

Copyright © 2004 by the American Society of Mechanical Engineers.
No reproduction may be made of this material without written consent of ASME.

Table 11
Full-load motor-running currents in amperes corresponding to various dc horsepower ratings

(See Clauses 15.1, 15.2, and 20.1.)

Horsepower	90 V	110–120 V	180 V	220–240 V	500 V	550–600 V
1/10	—	2.0	—	1.0	—	—
1/8	—	2.2	—	1.1	—	—
1/6	—	2.4	—	1.2	—	—
1/4*	4.0	3.1	2.0	1.6	—	—
1/3	5.2	4.1	2.6	2.0	—	—
1/2	6.8	5.4	3.4	2.7	—	—
3/4	9.6	7.6	4.8	3.8	—	1.6
1	12.2	9.5	6.1	4.7	—	2.0
1-1/2	—	13.2	8.3	6.6	—	2.7
2	—	17.0	10.8	8.5	—	3.6
3	—	25.0	16.0	12.2	—	5.2
5	—	40.0	27.0	20.0	—	8.3
7-1/2	—	58.0	—	29.0	13.6	12.2
10	—	76.0	—	38.0	18.0	16.0
15	—	110.0	—	55.0	27.0	24.0
20	—	148.0	—	72.0	34.0	31.0
25	—	184.0	—	89.0	43.0	38.0
30	—	220.0	—	106.0	51.0	46.0
40	—	292.0	—	140.0	67.0	61.0
50	—	360.0	—	173.0	83.0	75.0
60	—	—	—	206.0	99.0	90.0
75	—	—	—	255.0	123.0	111.0
100	—	—	—	341.0	164.0	148.0
125	—	—	—	425.0	205.0	185.0
150	—	—	—	506.0	246.0	222.0
200	—	—	—	675.0	330.0	294.0

*The full-load current for a 1/4 hp, 32 V dc motor is 8.6 A.

Copyright © 2004 by the American Society of Mechanical Engineers.
No reproduction may be made of this material without written consent of ASME.

Table 12
Minimum conductor spacings for printed circuit boards*

(See Clauses 16.1 and 19.6.1.)

Volt† ac rms or dc	Transient voltage not limited				Transient voltage limited			
	Coated		Uncoated		Coated		Uncoated	
	mm	(in)	mm	(in)	mm	(in)	mm	(in)
50	0.18	(0.007)	0.85	(0.033)	0.025	(0.001)	0.04	(0.002)
100	0.25	(0.009)	1.00	(0.039)	0.10	(0.004)	0.16	(0.006)
125	0.28	(0.011)	1.05	(0.041)	0.16	(0.006)	0.25	(0.009)
150	0.32	(0.012)	1.10	(0.043)	0.25	(0.009)	0.40	(0.015)
200	0.42	(0.016)	1.40	(0.055)	0.40	(0.015)	0.63	(0.025)
250	0.56	(0.022)	1.80	(0.070)	0.56	(0.022)	1.00	(0.039)
320	0.75	(0.029)	2.20	(0.087)	0.75	(0.029)	1.60	(0.061)
400	1.00	(0.039)	2.80	(0.110)	1.00	(0.039)	2.00	(0.079)
500	1.30	(0.051)	3.60	(0.142)	1.30	(0.051)	2.50	(0.098)
630	1.80	(0.070)	4.50	(0.177)	1.80	(0.070)	3.20	(0.126)
800	2.40	(0.094)	5.60	(0.219)	2.40	(0.094)	4.00	(0.157)
1000	3.20	(0.126)	7.10	(0.279)	3.20	(0.126)	5.00	(0.197)

**The base material shall have a minimum CTI of 100. The coating shall comply with the requirements of Clause 19.6.*

†Between the traces where spacing is measured.

Copyright © 2004 by the American Society of Mechanical Engineers.
No reproduction may be made of this material without written consent of ASME.

Table 13
Minimum acceptable spacings for equipment for which transient voltages are known and controlled

(See Clause 16.2.)

Short-circuit power	Peak working voltage	Minimum spacing, mm (in)						
		Between bare live parts of opposite polarity, and between bare live parts and grounded parts other than the enclosure or exposed metal parts				Between any bare live parts and the walls of a metal enclosure, including fittings for conduit or armoured cable*		
		Through air or oil		Over surface		Through air	Over surface	
More than 10 kVA for use where transient voltages are known and controlled	0–50	0.76	(0.030)	0.76	(0.030)	12.7†	6.3	(0.25)
	51–225	1.90	(0.075)	2.50	(0.100)	12.7	2.7	(0.50)
	226–450	3.80	(0.150)	5.10	(0.200)	12.7	12.7	(0.50)
	451–900	7.60	(0.300)	10.10	(0.39)	12.7	12.7	(0.50)
More than 500 VA but not more than 10 kVA‡	0–30	0.76	(0.030)	0.76	(0.030)	12.7†	6.3	(0.25)
	31–50	0.76	(0.030)	0.76	(0.030)	12.7†	6.3	(0.25)
	51–225	1.52	(0.060)	1.52	(0.060)	12.7	12.7	(0.50)
	226–450	2.50	(0.100)	2.50	(0.100)	12.7	12.7	(0.50)
	451–900	5.10	(0.200)	5.10	(0.200)	12.7	12.7	(0.50)
500 VA or less‡	0–36	0.30	(0.012)	0.30	(0.012)	12.7†	6.3	(0.25)
	37–72	0.40	(0.016)	0.40	(0.016)	12.7†	6.3	(0.25)
	73–100	0.76	(0.030)	0.76	(0.030)	12.7†	6.3	(0.25)
	101–225	1.14	(0.045)	1.14	(0.045)	12.7	12.7	(0.50)
	226–450	1.52	(0.060)	1.52	(0.060)	12.7	12.7	(0.50)
	451–900	2.50	(0.100)	2.50	(0.100)	12.7	12.7	(0.50)

A metal piece attached to the enclosure shall be considered to be part of the enclosure if deformation of the enclosure is likely to reduce spacings between the metal piece and uninsulated live parts. Spacings specified for parts other than enclosure walls shall be acceptable for metal walls of a subassembly mounted inside another enclosure if spacings in the subassembly are rigidly maintained.

†*Where deflection of an enclosure wall cannot reduce the through-air spacing to the enclosure wall, the spacing through air may be* 6.3 mm *(0.25 in).*

‡*Maximum short-circuit power is the product of the open-circuit voltage and the short-circuit current available at the supply terminals when protective devices are bypassed.*

Notes:

(1) *When measuring an over-surface spacing, any slot, groove, or similar feature that is* 0.33 mm *(0.013 in) wide or less in the contour of insulating material shall be disregarded.*

(2) *When measuring spacings, an air space of* 0.33 mm *(0.013 in) or less between a live part and an insulating surface shall be disregarded.*

Copyright © 2004 by the American Society of Mechanical Engineers.
No reproduction may be made of this material without written consent of ASME.

Table 14
Dimensions of bushings
(See Clause 16.25.)

Trade size of conduits	Bushing dimensions, mm (in)	
	Overall diameter	Height
1/2	25.4 (1)	9.5 (3/8)
3/4	31.4 (1-15/16)	10.7 (27/64)
1	40.5 (1-19/32)	13.1 (33/64)
1-1/4	49.2 (1-15/16)	14.3 (9/16)
1-1/2	56.0 (2-13/64)	15.1 (19/32)
2	68.7 (2-45/64)	15.8 (5/8)
2-1/2	81.8 (3-7/32)	19.1 (3/4)
3	98.4 (3-7/8)	20.6 (13/16)
3-1/2	112.7 (4-7/16)	23.8 (15/16)
4	126.2 (4-31/32)	25.4 (1)
4-1/2	140.9 (1-35/64)	27.0 (1-1/16)
5	158.0 (6-7/32)	30.2 (1-3/16)
6	183.4 (7-7/32)	31.8 (1-1/4)

Table 15
Size and number of conductors per grounding termination
(See Clause 17.4.)

Type of termination	Maximum conductor size, AWG	Maximum number of conductors
Binding head screw	No. 10	1
Screw with retaining means	No. 10	2
Wire connectors as per applicable wire connector Standard:		
(a) single conductor	As approved	1
(b) multiple conductor	As approved	As approved
(c) saddle clamp type	As approved	2

Note: *Where a connector is certified for a range of conductor sizes, more than one conductor may be terminated in one connector, provided that the conductors are twisted together before being inserted in the connector and the equipment is so marked (see Clause 20.16). Conductors larger than No. 6 AWG shall not be twisted together.*

Copyright © 2004 by the American Society of Mechanical Engineers.
No reproduction may be made of this material without written consent of ASME.

Table 16
Size of grounding conductors
(See Clause 17.5.)

Maximum rating of circuit not exceeding, A	Copper wire, AWG	Aluminum wire, AWG
15	14	12
20	12	10
30	10	8
40	10	8
60	10	8
100	8	6
190	6	4
300	4	2
400	3	1
500	2	0
600	1	00
800	0	000
1000	00	0000
1200	000	250 kcmil
1600	0000	350 kcmil
2000	250 kcmil	400 kcmil
2500	350 kcmil	500 kcmil
3000	400 kcmil	600 kcmil
4000	500 kcmil	800 kcmil
5000	700 kcmil	1000 kcmil
6000	800 kcmil	1250 kcmil

Table 17
Sequence of tests for solid-state ac motor controllers
(See Clause 19.3.1.)

Standard reference clause	Test	Sample number* 1 Sequence	2 Sequence	3 Sequence
19.3.3	Temperature	1	—	—
19.3.4	Dielectric voltage withstand	2	3	—
19.3.5	Overvoltage and undervoltage	3	—	—
19.3.6	Overload	—	1	—
19.3.6, 19.3.7	Endurance	—	2	—
19.3.8	Short-circuit	—	—	1

**All or any combination of sequences may be conducted on a single sample if agreeable to those concerned. More than one sample may be used if more than one rating is being tested. One sequence need not be completed as a prerequisite to the starting of another.*

Copyright © 2004 by the American Society of Mechanical Engineers.
No reproduction may be made of this material without written consent of ASME.

Table 18
Maximum permissible temperature rises

(See Clauses 19.3.3.1 and 19.4.2.1.)

	Materials and components	°C	(°F)
1.	Knife-switch blades and contact jaws	30	(86)
2.	Fuse clips	30	(86)
2(a).	Fuse clips when tested with a fuse intended to provide branch-circuit protection	85	(185)
3.	Rubber or thermoplastic insulated conductors*†	35	(95)
4.	Field wiring terminals‡ — when wired with 60 °C or 60/75 °C conductors	50	(122)
	— when wired with 75 °C conductors	65	(149)
5.	Buses and connecting straps§	**	
6.	Contacts:		
	Solid and built-up silver, silver alloy, and silver-faced	††	(149)
	All other metals	65	
7.	Insulation systems —		
	Class 90 insulation systems*:		
	Thermocouple method	50	(122)
	Resistance method	70	(158)
	Class 105 insulation systems:		
	Thermocouple method	65	(149)
	Resistance method	85	(185)
	Class 130 insulation systems:		
	Thermocouple method	85	(185)
	Resistance method	105	(221)
	Class 105 insulation systems on single-layer series coil with exposed surfaces, either uninsulated or enamelled, thermocouple method	90	(194)
	Class 155 (F) insulation systems:		
	Thermocouple method	95	(203)
	Resistance method	115	(239)
	Class 180 (H) insulation systems:		
	Thermocouple method	115	(239)
	Resistance method	135	(275)
8.	Phenolic composition*	125	(257)
9.	In the issuing air, 25 mm (1 in) above the enclosure	175	(347)
10.	On the embedding material of a resistor, a rheostat, and a wall-mounted dimmer with an embedded resistive element	300	(572)
11.	On the embedding material of a rheostatic dimmer having embedded resistive conductors and arranged for mounting on a switchboard or in a non-combustible frame	350	(662)
12.	On bare resistor material, thermocouple method	375	(707)
13.	Power-switching semiconductors	‡‡	
14.	Capacitors	§§	§§
15.	Printed circuit boards	***	***

(Continued)

Copyright © 2004 by the American Society of Mechanical Engineers.
No reproduction may be made of this material without written consent of ASME.

Table 18 (Concluded)

**The limitation on phenolic composition and on rubber thermoplastic insulation does not apply to compounds that have been investigated and found suitable for a higher temperature.*

*†For standard insulated conductors other than those mentioned in Specific note *, reference should be made to the applicable electrical code, and the maximum allowable temperature rise shall not exceed the maximum operating temperature specified in the code for the wire in question minus an assumed ambient (room) temperature of* 25 °C *(77 °F). The temperature limit shall not apply to a contact that is mounted directly on a resistor element or a brush on a variable-voltage autotransformer.*

‡The temperature on a wiring terminal or lug shall be measured at the point most likely to be contacted by the insulation of a conductor installed as in actual service.

§The limit shall not apply to connections to a source of heat, such as a resistor and a current element of an overload relay. The temperature on such connections shall be such that there will be no deterioration of the electrical connection in normal service.

***The maximum temperature rises for copper construction shall be determined by the temperature limitations on the bus supports, temperature limitations on the material for adjacent parts, or* 100 °C *(212°F), whichever is lower. There shall be no structural deterioration of the assembly, loosening of parts, cracking or flaking of materials, loss of temper of spring, annealing of parts, or other visible damage.*

††Temperature limited by the temperature limitations on the material for adjacent parts. There shall be no structural deterioration of the contact assembly, loosening of parts, cracking or flaking of materials, loss of temper or spring, annealing of parts, or other visible damage.

‡‡The maximum acceptable temperature rise on the case shall be the maximum case temperature for the applied power dissipation recommended by the semiconductor manufacturer minus an assumed ambient temperature of 40 °C *(104°F) for an enclosed device and* 50 °C *(122°F) for an open device.*

§§For a capacitor, the maximum acceptable temperature rise shall be the marked temperature limit of the capacitor minus an assumed ambient temperature of 25 °C *(77°F).*

****The maximum acceptable operating temperature of the printed circuit board shall not be exceeded.*

Note: *The temperature limit shall not apply to a contact that is mounted directly on a resistor element or a brush on a variable-voltage autotransformer.*

Copyright © 2004 by the American Society of Mechanical Engineers.
No reproduction may be made of this material without written consent of ASME.

Table 19
Sequence of tests for power-conversion equipment
(See Clause 19.4.1.1.)

Standard reference clause	Test	Sample number* 1 Sequence	2 Sequence	3 Sequence	4 Sequence	5 Sequence	6 Sequence	7 Sequence
19.4.2	Temperature	1	—	—	—	—	—	—
19.4.5	Normal operation	—	1	—	—	—	—	—
19.4.6	Contactor overload	—	2	—	—	—	—	—
19.4.7	Single phasing	—	3	—	—	—	—	—
19.4.8	Inoperative blower motor	—	—	1	—	—	—	—
19.4.9	Clogged filter	—	—	—	1	—	—	—
19.4.10	Current-limiting control	—	—	—	—	1	—	—
19.4.3	Dielectric voltage withstand	2	4	2	2	2	1	—
19.3.8	Short-circuit†	—	—	—	—	—	—	—
19.4.11	Breakdown of components	—	—	—	—	—	—	1

**All or any combination of sequences may be conducted on a single sample if agreeable to those concerned. More than one sample may be used if more than one rating is being tested. One sequence need not be completed as a prerequisite to the starting of another.*
†See Clause 19.4.6.

Copyright © 2004 by the American Society of Mechanical Engineers.
No reproduction may be made of this material without written consent of ASME.

Table 20
Rating codes for ac control circuit contacts at 50 and 60 Hz

(See Clauses 20.1 and 20.4.)

Contact rating code designation*	Thermal continuous test current, A	Maximum current, A†								Maximum VA	
		120 V		240 V		480 V		600 V			
		Make	Break	Make	Break	Make	Break	Make	Break	Make	Break
A150	10	60	6.00	—	—-	—	—	—	—	7190	719
A300	10	60	6.00	30	3.00	—	—	—	—	7190	719
A600	10	60	6.00	30	3.00	15	1.50	12	1.19	7190	719
B150	5	30	3.00	—	—	—	—	—	—	3600	360
B300	5	30	3.00	15	1.50	—	—	—	—	3600	360
B600	5	30	3.00	15	1.50	7.50	0.75	6	0.60	3600	360
C150	2.5	15	1.50	—	—	—	—	—	—	1800	180
C300	2.5	15	1.50	7.5	0.75	—	—	—	—	1800	180
C600	2.5	15	1.50	7.5	0.75	3.75	0.375	3.00	0.30	1800	180
D150	1.0	3.60	0.60	—	—	—	—	—	—	432	72
D300	1.0	3.60	0.60	1.80	0.30	—	—	—	—	432	73
E150	0.5	1.80	0.30	—	—	—	—	—	—	216	36

**The numerical suffix designates the maximum voltage design values, which shall be 600 V, 300 V, and 150 V for suffixes 600, 300, and 150, respectively.*

†For voltages between the maximum design value and 120 V, the maximum make-and-break ratings shall be obtained by dividing the volt-ampere rating by the applicable voltage. For voltages below 120 V, the maximum make current shall be the same as for 120 V, and the maximum break current shall be obtained by dividing the break volt-ampere rating by the applicable voltage but shall not exceed the thermal continuous test current.

Copyright © 2004 by the American Society of Mechanical Engineers.
No reproduction may be made of this material without written consent of ASME.

Table 21
Rating codes for dc control circuit contacts

(See Clause 20.4.)

Contact rating code designation*	Thermal continuous test current, A	Maximum make-and-break current, A			Maximum make-and-break VA† at 300 V or less
		125 V	250 V	301 to 600 V	
N150	10	2.20	—	—	275
N300	10	2.20	1.10	—	275
N600	10	2.20	1.10	0.40	275
P150	5.0	1.10	—	—	138
P300	5.0	1.10	0.55	—	138
P600	5.0	1.10	0.55	0.19	138
Q150	2.5	0.55	—	—	69
Q300	2.5	0.55	0.27	—	69
Q600	2.5	0.55	0.27	0.10	69
R150	1.0	0.22	—	—	28
R300	1.0	0.22	0.11	—	28

**The numerical suffix designates the maximum voltage design values, which shall* be 600 V, 300 V, *and* 150 V *for suffixes 600, 300, and 150, respectively.*

†*For voltages of* 300 V *or less, the maximum make-and-break ratings shall be obtained by dividing the volt-ampere rating by the applicable voltage but shall not exceed the thermal continuous test current.*

Copyright © 2004 by the American Society of Mechanical Engineers.
No reproduction may be made of this material without written consent of ASME.

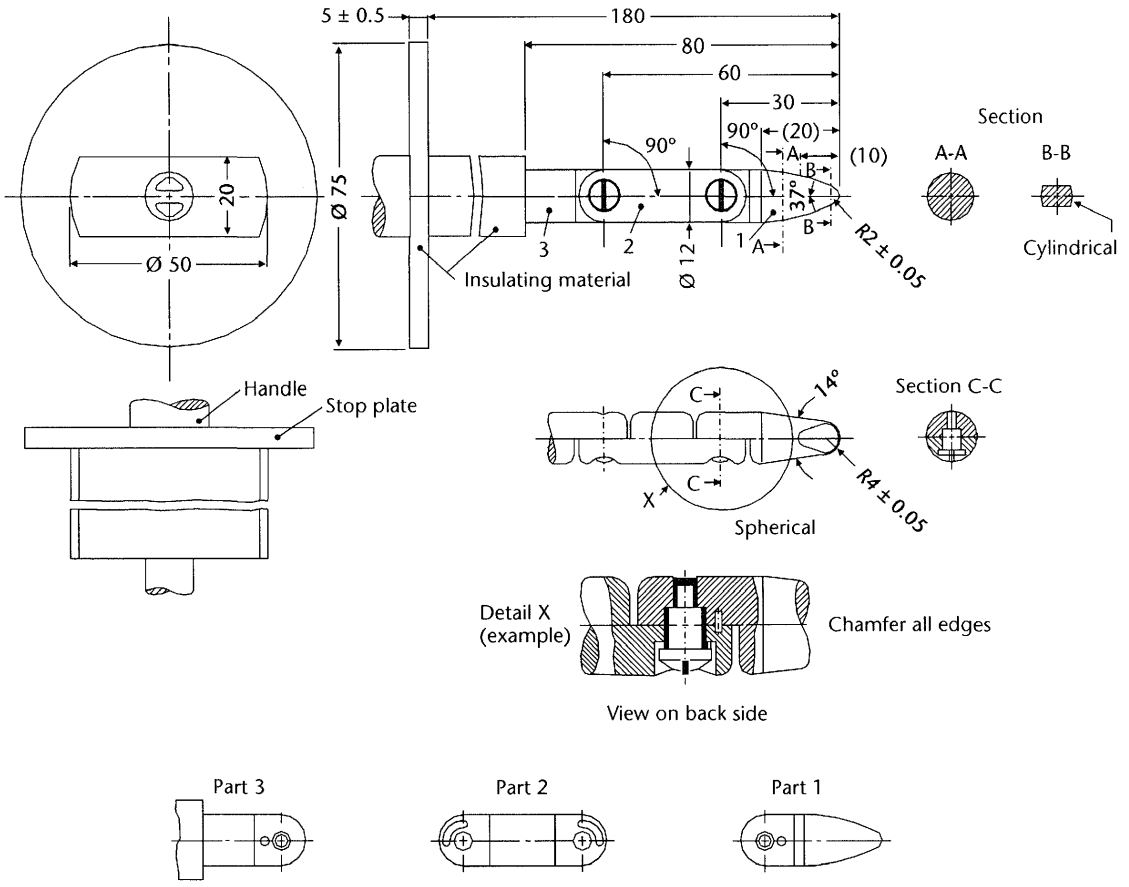

Note: *All dimensions given are in millimetres.*

Figure 1
Articulated probe
(See Clauses 7.1 and 7.2.)

Copyright © 2004 by the American Society of Mechanical Engineers.
No reproduction may be made of this material without written consent of ASME.

Annex A (informative)
Factory test

Note: *This Annex is not a mandatory part of this Standard. However, it has been written in mandatory terms to facilitate adoption where users of the Standard or regulatory authorities (authorities having jurisdiction) wish to formally adopt it as additional requirements to this Standard.*

A.1 Scope
This Annex describes the factory test for electrical equipment conducted at the conclusion of manufacture and prior to shipment.

A.2 Factory test
At the conclusion of manufacture and before shipment, the equipment shall withstand, for 60 s without breakdown, the application of 1000 V ac plus twice the maximum rated voltage between live parts and exposed non-current-carrying metal parts. The factory test may be made at existing room temperature. As an alternative, a potential 19% higher may be applied for 1 s.

The test may also be conducted using a dc potential 1.414 times the ac potential specified.

WARNING: The factory test(s) specified can present a hazard of injury to personnel and/or property and should be performed only by persons who are knowledgeable about such hazards and under conditions designed to minimize the possibility of injury.

Notes:

(1) *The test is not required on circuits operated at* 30 V *rms or* 42.4 V *peak or less.*

(2) *Consideration will be given to performing the test before final assembly if the test on unassembled components is representative of tests performed on the completed unit. Any component not included shall not affect the results with respect to determination of possible electric shock from miswiring, defective components, unacceptable creepage distances and clearances, and the like.*

(3) *Solid-state components that might be damaged by a secondary effect of the test (induced voltage surge, excessive heating, and the like) may be short-circuited by means of a temporary electrical jumper, or the test may be conducted without the component electrically connected, provided that the wiring and terminal spacings are maintained. Additionally, transient voltage suppression devices other than capacitors connected from primary wiring to dead metal may be disconnected during the test.*

A.3 Sampling
Consideration shall be given to the use of a sampling procedure proposed by the manufacturer for the factory test in the cases of devices with minimal or no factory wiring.

Copyright © 2004 by the American Society of Mechanical Engineers.
No reproduction may be made of this material without written consent of ASME.

Annex B (informative)
CSA and ASME elevator publications

Note: *This Annex is not a mandatory part of this Standard.*

B.1 CSA (Canadian Standards Association) elevator publications

The following CSA publications are of special interest to users of this Standard. For prices and availability, contact

Canadian Standards Association
5060 Spectrum Way, Suite 100
Mississauga, Ontario, Canada
L4W 5N6
1-800-463-6727

CSA B44-00, *Safety Code for Elevators*
This CSA Standard establishes minimum requirements for the design, construction, installation, operation, inspection, testing, maintenance, alteration, and repair of elevators, dumbwaiters, escalators, moving walks, freight platform lifts, and their hoistways or wellways, and temporary use of permanent elevators for carrying workers or materials.

CAN/CSA-B355-00, *Lifts for Persons with Physical Disabilities*
This National Standard of Canada establishes minimum requirements for the design, construction, installation, operation, inspection, testing, maintenance, alteration, and repair of lifts for persons with physical disabilities (platform lifts and stairway chairlifts).

B.2 ASME (American Society of Mechanical Engineers) elevator publications

ASME has developed and published safety codes and standards for elevators, escalators, and related equipment since 1921 when the first edition of A17.1, *Safety Code for Elevators and Escalators*, was published.

CSA B44.1/ASME-A17.5 is one of the numerous codes and standards that have been or are being developed by ASME. The following publications are of special interest to users of this Standard. For prices and availability, contact

The American Society of Mechanical Engineers
22 Law Drive
Box 2900
Fairfield, New Jersey, 07007-2900, USA
1-800-843-2763

ASME A17.1, *Safety Code for Elevators and Escalators*
This American National Standard Safety Code covers the design, construction, installation, operation, testing, maintenance, alteration, and repair of elevators, dumbwaiters, escalators, moving walks, material lifts, and dumbwaiters with automatic transfer devices.

Copyright © 2004 by the American Society of Mechanical Engineers.
No reproduction may be made of this material without written consent of ASME.

ASME A17.2, *Guide for Inspection of Elevators, Escalators and Moving Walks*
This Guide gives detailed procedures for the inspection and testing of elevators, escalators, and moving walks required to conform to A17.1 (1955 and later editions), *Safety Code for Elevators and Escalators*, and A17.3, *Safety Code for Existing Elevators and Escalators*. Subsections are arranged to focus on routine and periodic inspection and test requirements, as well as acceptance criteria.

ASME A17.3, *Safety Code for Existing Elevators and Escalators*
This Code covers retroactive requirements for existing elevators and escalators. The purpose of this Code is to establish minimum requirements that will provide a reasonable degree of safety for the general public. While many of these requirements will also increase the degree of safety for the elevator mechanic and inspector, this area has not been specifically addressed in this Code.

ASME A17.4, *Guide for Emergency Personnel*
This Guide for emergency personnel (fire, police, etc.), building owners, lessees, and building operating managers explains the proper procedures to be used for the safe removal of passengers from stalled cars, as well as firefighters' service operating procedures.

ASME 18.1, *Safety Standard for Platform Lifts and Stairway Chairlifts*
This American National Standard Safety Code covers the design, construction, installation, operation, testing, maintenance, alteration, and repair of platform lifts and stairway chairlifts.

Published Interpretations
Interpretations of the various A17 Standards are published periodically. Interpretations of A17.1 and A17.2 approved by the A17 Committee from June 14, 1972, through June 1979 were published in a separate book in 1980. With the publication of the 1981 edition of the Code, a new procedure was introduced: interpretations are published with each new edition and supplement of the applicable standard. A compilation of Interpretation Book Nos. 2–13 (June 1979 to May 1989) has also been published by ASME. A compilation of all interpretations can also be obtained through the A17 CD-ROM.

Handbook on A17.1 Safety Code
This handbook augments the A17.1 Code with commentary, diagrams, and illustrations that are intended to explain the requirements of the A17.1 Code. The commentary contained in the handbook is the opinion of the author and has not been approved by the A17 Committee.

ASME QEI-1, *Standard for the Qualification of Elevator Inspectors*
This Standard covers requirements for the qualification and duties of inspectors and inspection supervisors engaged in the inspection and testing of equipment within the scope of the A17.1 Code. It also includes requirements for the accreditation of organizations that certify inspectors and inspection supervisors meeting the QEI criteria.

Copyright © 2004 by the American Society of Mechanical Engineers.
No reproduction may be made of this material without written consent of ASME.

Proposition de modification

N'hésitez pas à nous faire part de vos suggestions et de vos commentaires. Au moment de soumettre des propositions de modification aux normes CSA et autres publications CSA prière de fournir les renseignements demandés ci-dessous et de formuler les propositions sur une feuille volante. Il est recommandé d'inclure

- le numéro de la norme/publication
- le numéro de l'article, du tableau ou de la figure visé
- la formulation proposée
- la raison de cette modification.

Proposal for change

CSA welcomes your suggestions and comments. To submit your proposals for changes to CSA Standards and other CSA publications, please supply the information requested below and attach your proposal for change on a separate page(s). Be sure to include the

- Standard/publication number
- relevant Clause, Table, and/or Figure number(s)
- wording of the proposed change
- rationale for the change.

Nom/Name: _____

Affiliation: _____

Adresse/Address: _____

_____

Ville/City: _____

État/Province/State: _____

Pays/Country: _____ **Code postal/Postal/Zip code:** _____

Téléphone/Telephone: _____ **Télécopieur/Fax:** _____

Date: _____

J'accepte que la CSA conserve et utilise les renseignements ci-dessus afin de faciliter la réception de mes suggestions et commentaires.

I consent to CSA collecting and using the above information to facilitate the collection of my suggestions and comments.

Consultez la politique CSA en matière de confidentialité au www.csagroup.org/legal pour savoir comment nous protégeons vos renseignements personnels.

Visit CSA's policy on privacy at www.csagroup.org/legal to find out how we protect your personal information.

Copyright © 2004 by the American Society of Mechanical Engineers.
No reproduction may be made of this material without written consent of ASME.

Page intentionally blank

Copyright © 2004 by the American Society of Mechanical Engineers.
No reproduction may be made of this material without written consent of ASME.

Page intentionally blank

Copyright © 2004 by the American Society of Mechanical Engineers.
No reproduction may be made of this material without written consent of ASME.

Page intentionally blank



ISBN 1-55397-506-5

Copyright © 2004 by the American Society of Mechanical Engineers.
No reproduction may be made of this material without written consent of ASME.